EDITORIAL

ALAMEDA, California, has adopted a charter providing for the appointment of a city manager.

IN another column appears an announcement of the spring meeting of the Portland Cement Association, which will be held at San Francisco, April 16 to 18. This is the first time in the history of the Association that a meeting has been held west of Chicago.

THE organization of the California State Highway Department will be continued, in spite of the fact that the money from the $15,000,000 bond issue will not become available until July. Plans have been made for the use of the State's share of the motor-vehicle receipts. This will probably amount to over $1,000,000, which will enable the Highway Commission to continue surveys and similar work, and probably to award contracts for some minor pieces of work.

THE unreliability of the daily press on matters requiring even a small amount of technical information was illustrated once more in a pseudo-scientific article that appeared in a San Francisco daily. Discussing household uses of electricity, the article stated that "It is a mystery why the rate is so much higher here when the wires that bring the 'juice' down from the power-plants gather it en route and are more heavily charged at this end of the line than at the other end. I dare say a change will come with the education of the housewife." Possibly the change mentioned will be in this remarkable method of generation.

KERN county is the most recent convert to the policy of centralized control of highways. A road superintendent has been appointed who will have charge of the repair and maintenance of the concrete-paved highways now being constructed from the bond issue of $2,500,000 voted in 1913. It is, however, unfortunate that this position has been given to a former supervisor, who is without technical training, and while possessed of considerable experience in patching the various makeshifts that, until recently, passed in that region for roads, has had small opportunity for becoming acquainted with methods of maintaining permanent highways.

IT is seldom that either an individual or a publication likes to acknowledge a mistake, but here is a case where we are glad to do so. In a recent number, when discussing the movement to amend the charter of San Jose, California, so as to prevent the appointment of non-residents to municipal positions and thus interfere with the efforts of Mr. Thomas H. Reed, city manager, to give the city an efficient government, we expressed the belief that while such an amendment would not carry, nevertheless it would be possible for its backers to force an election. It is a pleasure to report that we did the voters of San Jose an injustice. The proposed measure failed even to obtain enough signatures to compel the council to call an election, and the movement appears to have collapsed entirely.

The Municipal Cement-Plant of the City of Los Angeles

In another column there appears a discussion by Mr. F. C. Finkle and Mr. Burt A. Heinly of certain points in connection with that much discussed topic, the cement-plant constructed by the city of Los Angeles at Monolith. While Mr. Heinly shows that Mr. Finkle is in error in stating that the county has not been able to sell cement to the city since the plant was acquired by the county, still it seems to us that Mr. Heinly's letter, together with Mr. Clemens' statement, does not completely answer the criticisms made by Mr. Finkle and others.

The accounts of the Aqueduct may have been kept in such a manner that it is now impossible to segregate the cost of lost and damaged sacks for the first year and a half of the operation of the plant. Nevertheless, since this period probably represents only about one-third of the most active period of operations, and the total allowance, provided every sack was lost, could not have exceeded $0.40 per barrel, it seems probable that a few cents per barrel would be sufficient for this item. Whether the allowance for depreciation of $0.10 per barrel is or is not sufficiently large cannot, of course, be determined until the plant is finally sold or otherwise disposed of by the city. All things considered, it appears that it actually cost the city somewhere around $1.80 per barrel to manufacture cement, a figure but little lower than the ruling price of cement from private manufacturers and considerably higher than the price quoted by them to several large consumers, notably the State Highway Commission. It is perfectly true that this cost includes the necessarily large cost of getting the plant started and in working order, but the main question at issue is not whether or not the plant was well managed, but whether or not the city's action in building the plant has been justified by the results. In determining the answer to this question, the unsupported statement that some hypothetical private company, untrammeled by some of the admitted disadvantages of municipal ownership, could have operated the plant and pro-

Generated on 2024-09-30 01:26 GMT / https://hdl.handle.net/2027/uiug.30112007838433
Public Domain, Google-digitized / http://www.hathitrust.org/access_use#pd-google
Digitized by Google
Original from UNIVERSITY OF ILLINOIS AT URBANA-CHAMPAIGN

duced cement for less than $1 per barrel has little weight.

The statement of bids presented by Mr. Heinly would seem to indicate that the private cement-companies have lowered prices to the city since the county leased the municipal cement-plant, and that the established companies have refused to bid as low as the county on certain contracts. However, recent events would seem to bear out Mr. Finkle's statement that the county has been operating the cement-plant at a loss. The Board of Supervisors discovered that there is no more money in the general fund of the county and they immediately ordered work at the cement-plant suspended as soon as the present supply of clinker is exhausted. If the plant were actually yielding a profit, such an order would hardly have been issued. Our columns are open to further discussion of the entire subject.

Engineers' Estimates and the Anderson-Cottonwood Irrigation District

Nearly two thousand years ago attention was called to the fact that it is advisable to count the cost before commencing the construction of a tower. Since that time many engineer's estimates have been made. In some cases, these estimates have corresponded closely to the actual cost of construction. In too many cases, however, the cost has far exceeded the engineer's estimate. Sometimes this has been the result of inefficient management during construction. More often it has been caused by underestimating or overlooking items of cost. The present trouble in the Anderson-Cottonwood irrigation district appears to belong in the latter class.

Pending the announcement of the results of the complete investigation now under way, the following facts may be stated: The district was formed about two years ago, containing 32,000 acres of land in the northern part of the Sacramento valley. An engineer was employed, who designed a system that he estimated would cost $360,000. This estimate was raised to $480,000 by the State Engineer. A bond issue for this amount was voted, and contracts for the construction of a large part of the system were awarded last spring. Most of the work was awarded to a contractor who has had considerable experience on that kind of construction, but whose figures were much lower than those named by the other bidders. A short time ago the engineer for the district resigned, and about the same time, the financial difficulties of the contractor became so serious that he was compelled to suspend work. The new engineer employed by the district decided after investigation that it will cost $488,000 besides the original $480,000 bond issue to complete the system. This estimate is now being checked by representatives of the State Engineering Department. When the funds at present on hand have been exhausted and the additional amount needed, determined, the question of a new bond issue will be submitted to the landowners.

From the point of view of the property-owners in the district, the situation might be much worse. Apparently little or no money has been wasted. The contractor and indirectly, his creditors, have lost money because the work was taken for less than it was worth. There will be some loss on account of necessary changes in the design of existing structures, for instance, the unlined earth canals were to have a 1 to 1 slope according to the original plans. However, there is every reason to believe that the settlers in the district will get their money's worth when the system is completed. Should the cost of reclamation be $30 per acre, as now seems probable, instead of the $11 of the original estimate, or the $15 set by the State Engineer, it would, nevertheless, not be too much for the land to stand.

Probably the general effect of all this upon irrigation districts and irrigation-district securities is more important than the question of what happens in the district itself. It is perhaps fortunate that the trouble has occurred at this time, when the State legislature is in session. Since irrigation-district projects have to be investigated by the State Engineer, the State in a certain sense stands back of the securities when issued. These bonds are now legal investments for savings banks, and they were beginning to be recognized generally as high-grade securities. Now comes this tremendous increase in an estimate that, nominally, at least, had the approval of the State. While in this particular case, the harm appears to have been slight, in some other district a 100% increase might mean all the difference between solvency and insolvency. It is perfectly true that no one could have foreseen the recent increases in the cost of all steel products, but this is a comparatively small item in the total cost of the system. If the State Engineer is to have the power to change the district engineer's estimate at all, his investigation should be sufficiently exhaustive to furnish at least an approximate indication of the size of the bond issue required so that the property-owners and the bond-buyers may know what to expect.

To accomplish this purpose it will probably be necessary to make some changes in the law governing irrigation districts. The plans for each district should be checked thoroughly, either by some competent member of the staff of the State Engineering Department, or else by a consulting engineer representing the Department. This investigation should extend to design as well as to quantities and unit costs. The cost of this investigation could very well be borne by the district, which would be compensated for this expenditure by the increased price for the bonds when offered for sale. Furthermore, provision should be made for occasional visits of inspection by a representative of the State Engineering Department. These provisions should not be considered a reflection on the district's engineer. We are all likely to make mistakes, and when a mistake may involve the credit of the district, an independent check is needed, even though it may be made by a man who is not a bit more capable than the district's engineer. With these safeguards, it will probably be feasible for the State actually to guarantee the bonds of irrigation districts.

Generated on 2024-09-30 01:27 GMT / https://hdl.handle.net/2027/uiug.30112007838433
Public Domain, Google-digitized / http://www.hathitrust.org/access_use#pd-google
Digitized by Google
Original from UNIVERSITY OF ILLINOIS AT URBANA-CHAMPAIGN

REVIEW OF THE MONTH

OIL statistics from the Californian fields for 1916 are not encouraging to those who are hoping for a reduction in the price of gasoline. The total production for the year was 92,000,000 barrels, and the shipments 104,000,000 barrels. At this rate stocks will be entirely exhausted in less than four years. The production in 1915 was 90,000,000 barrels and the shipments 92,000,000 barrels. The corresponding figures in 1914 were 103,000,000 and 94,000,000. Thus it is seen that the production in 1914, the greatest in the history of the State, was not as large as the consumption in 1916. It is also noteworthy that with nearly 300 wells drilling, the total production is practically stationary. Further increases in the price of both crude petroleum and refined products are probable. 'Dollar Oil by 1917' did not happen, but 'Dollar Oil during 1917' seems reasonably certain.

THE county-manager system first suggested in these columns about two years ago, is proposed for San Diego county by the board of freeholders which has recently completed a county charter. The customary elected Board of Supervisors is to be retained, but its function is to be almost entirely legislative, the administrative work now performed by members of that body being delegated to a county manager. This official is to be selected by the affirmative vote of seven of the nine supervisors after a recommendation by the Civil Service Commission, examination to be waived. The manager is to direct the county's affairs and business, and will be *ex officio* purchasing agent, road commissioner, and surveyor for the county. Making all county officials appointive, except the supervisors and the superior judges, is another progressive step. The other principal county officials are to be appointed by the Board of Supervisors from a list recommended by a Civil Service Commission. This commission is to be composed of three members, one to be selected by the Governor of the State, one by the superior judges of the county, and one by the Board of Supervisors. Provision is also made for consolidation of county and city offices where practicable. The charter sounds like business and we hope that it will be adopted by the voters.

CENTRALIZED control of highway construction and maintenance is the object of several bills that have been introduced at the present session of the California legislature. Like the measures that were defeated two years ago, mainly because of the opposition of some of the less progressive county supervisors, these bills agree in providing for a road commissioner or engineer, who shall have entire charge of the construction and maintenance of highways throughout the county. The commissioner is to be appointed by the supervisors, but while some of the bills make the wise provision that this appointment is to be made from an eligible list prepared by the State Engineering Department or the State Highway Commission, according to other measures, the supervisors may appoint anyone they please. While in most cases, this would probably be unobjectionable, there is great danger of such appointments being dictated by favoritism. Selection from an eligible list would give the supervisors considerable freedom of choice, while ensuring the appointment of a competent man. None of the bills appear to provide for two or more of the smaller counties combining and employing one engineer. The result is that the prescribed salaries are in many cases absurdly small, $900 per year in the three smallest counties. While this is doubtless all that these counties can afford, it is manifestly too little for a competent man who is to devote his whole time to the work. Probably the most objectionable feature of the present system, is not that the supervisors are necessarily incompetent, but that they do not and cannot devote their whole time and attention to highway work. Any revision of the law should not continue this abuse in a new form. Alpine and Mono counties, for instance, had far better combine the funds available and employ the whole time of one engineer, rather than each employ a man who is obliged to continue to follow hotel-keeping, or even general engineering, as his principal means of livelihood.

DRAINAGE of agricultural lands is a matter of increasing importance throughout the country and, by a curious paradox, this is particularly true in the arid West. This is because there are comparatively few irrigated regions where the slope of the ground and the character of the soil are such as to provide adequate natural drainage. The attention of our readers is called to the article in this number on the Drainage of Irrigated Land, and also to the article on proposed work in connection with the Pine Flat project. The drainage question is a matter of interest not only to engineers, but also to contractors and to manufacturers of trenching machinery, cement, and clay products. During the next few years, hundreds of miles of trenches and open ditches will be constructed in the Pacific Coast States in connection with drainage projects. Most of these trenches will be from six to ten feet deep. They will be constructed mainly in earth, with some hardpan, but very little rock. In other words, the contractor who best understands the operation of trenching machinery and who has the best equipment of this kind, is going to get the work and make some money. Furthermore, the manufacturer who makes the trenching ma-

Generated on 2024-09-30 01:23 GMT / https://hdl.handle.net/2027/uiug.30112007838433
Public Domain, Google-digitized / http://www.hathitrust.org/access_use#pd-google
Digitized by Google
Original from UNIVERSITY OF ILLINOIS AT URBANA-CHAMPAIGN

chine best suited to this class of work, is also in a position of advantage. In the case of the cement-tile and clay-tile manufacturers, competition will be even stronger, since it will be present not only between the products of the individual manufacturers, but also between the two materials. Until recently, clay-tile was used exclusively for drainage, but within the last few years cement-tile has come into favor and has been used on a number of drainage projects. Local conditions will probably determine the selection in most cases.

LOS ANGELES county has temporarily 'gone broke.' While it is nearly six months before the money from this year's taxes becomes available the county treasury is reported to be empty. Whether this applies to all the funds, or simply to the general fund, cannot be learned at this writing. At all events, the Board of Supervisors has found it necessary to stop all county work that is not absolutely necessary. In short, the happy-go-lucky idiotic method of making separate appropriations on impulse for each need, real or supposed, as it comes to attention, instead of planning a scientific budget, has had its logical result. The officials of Los Angeles county are not more careless than those of many other communities, merely more unlucky. We do not know how many State, county, municipal, and other governments have neglected to adopt a budget system for controlling their expenditures, but the number is entirely too large, and includes among others, the Federal government.

WHILE the taxpayers have just grounds for complaining of the officials that have been so careless with the county funds, there is another aspect to the situation that is no less important. Contract work has been brought to a standstill. Several highway contracts that have just been awarded have been rescinded. Other highway work has been summarily suspended. Bids had just been opened for the construction of some county buildings, but it was necessary to reject them. All this represents direct pecuniary loss to contractors who have acted in good faith, loss for which they can probably obtain no reparation, even through legal action. We suggest to the various contractors' associations that their members refuse to bid on municipal or county work, unless the officials are able to demonstrate that there is money available for that work, and that it will not be diverted from that purpose.

COMPENSATION for engineers was discussed at the annual meeting of the American Society of Civil Engineers, the committee appointed to investigate that question having made its final report. The committee received replies from 6378 engineers, including 5059 members of the Society and 1319 non-members. Consideration for the feelings of those engineers whose compensation happens to be less than the average, prevents us from reproducing the detailed diagrams. It might be stated, however, that the 'curve' of average yearly compensation commences at approximately $1200 for one year's experience, and is comparatively regular as far as the 25-year point when it reaches $6000. From this point the curve is somewhat erratic, but the general trend is practically level up to the 48-year point. From this point, the replies are necessarily few in number and the 'average curve' varies between wide limits. The committee presented other tables showing that the average compensation for all ages was approximately $4000, and that the average compensation of graduates of technical schools was somewhat higher than that of non-graduates of the same experience, except in the case of those with less than six years' experience. It is also shown that engineers in the various branches of Government employment received the smallest average compensation, the professors in technical schools next, railroad employes next, other corporation employes next, while the consulting engineers and the contractors head the list. Not much difference in compensation was noted between the different parts of the country, whatever variation there was seeming to follow the general variation in salaries and the cost of living. The comparatively small number of engineers who have gone to foreign countries naturally are receiving higher salaries than those who have remained at home.

THE first impression upon the mind of most readers of the report is probably a feeling of disappointment. Here was a committee of seven prominent engineers appointed to study compensation of engineers and conditions of employment. After four years' work, the result is a report covering most of the members of the National Society and a few members of local societies. The large number of engineers outside of any society are not represented at all. Surely it would have been possible to have obtained returns from some of them, by the use of such methods as circularizing the engineering departments of municipalities and corporations. It is true that a large number of these employes are merely draftsmen or instrumentmen, but what is a draftsman or instrumentman but an embryo engineer? Again, how many good engineers have been obliged during periods of depression to take subordinate positions? The engineers who sent replies to the committee were in general the more successful members of the profession, and it is probable that the figures for the average compensation for the entire profession, except perhaps for the first five years of experience, would not be more than two-thirds of those given by the committee.

AS already noted, the members of the committee were to investigate the conditions of employment as well as the compensation of engineers, but since a broad interpretation of the first subject would have probably resulted in much controversial discussion, they decided to confine themselves to the second subject. It has frequently been remarked that as long as a man is making money, he is contented, no matter what his conditions of employment may be, so that an investigation of the first topic was probably superfluous.

Generated on 2024-09-30 01:23 GMT / https://hdl.handle.net/2027/uiug.30112007838433
Public Domain, Google-digitized / http://www.hathitrust.org/access_use#pd-google
Digitized by Google
Original from UNIVERSITY OF ILLINOIS AT URBANA-CHAMPAIGN

DISCUSSION

The Municipal Cement-Plant of the City of Los Angeles

The Editor:

Sir—During construction of the Los Angeles Aqueduct, a municipal cement-plant was built at Monolith, Kern county, ostensibly for the purpose of producing cement for use on the Aqueduct at a lower price than it could be purchased in the open market. The city officials have never given out any figures regarding actual cost of production, but an investigating board found that the cost of the cement, including depreciation on the plant, was nearly double the price that could have been obtained from private companies and, in addition, the cement was of inferior quality.

When the Aqueduct was completed, the city tried to sell or lease the plant to private companies, but was unable to do so, presumably because they did not consider the terms offered satisfactory, considering the inferior quality of cement produced. The State of California also refused to purchase the plant. It was finally 'unloaded' on the county of Los Angeles. The plant, however, could not be purchased on account of legal difficulties interposed by tax-payers residing in the county and outside the city limits, but in spite of these objections, the Board of Supervisors proceeded to lease the plant on behalf of the county at a rental of $27,500 per year plus a royalty of $5\frac{5}{6}$c. per barrel of cement manufactured. The lease included an option allowing the county to buy the plant if it wishes to do so in the future, and imposed upon the county a further obligation to pay $11,000 per year as a depreciation charge, this charge to be waived in case the county purchases the plant. The price named in the option is $550,000, the alleged cost of construction being placed at somewhere between eight and nine hundred thousand dollars.

This lease was consummated two years ago, but the matter has been in litigation ever since because tax-payers outside the city limits attacked the lease in the courts. Because of the litigation, the county has paid no rental to the city, and recently demanded that the city pay taxes on the plant, which for the first half of the current year amounted to $999.66.

In the meantime, the county of Los Angeles has not been able to produce cement as cheaply as it could be purchased from private cement manufacturers, neither has the city been able to purchase any of the product that the county could not use, by reason of the fact that private cement-manufacturers have been able to underbid the county. Only recently the city of Los Angeles called for bids on furnishing 10,000 barrels of cement for use on the Chatsworth conduit from the Los Angeles Aqueduct, which is being constructed in the San Fernando valley. The contract was awarded to the Southwestern Portland Cement Co. at $1.55 per barrel, while the bid of the county was $1.75.

The operation of the plant is costing the tax-payers about $40,000 per year, because the cement is costing more than the price at which it could be purchased from private manufacturers. This is in addition to the rental to the city.

On December 16, 1916, the Grand Jury reported that it has cost the county $1.49 per barrel for cement manufactured at the plant, which does not include what the county is obligated to pay the city as rental, royalties, and depreciation on the plant. The Grand Jury found further that, for the year ended July 1, 1916, the cost to the county for making cement was $0.29 per barrel in excess of the price of cement in the open market.

The above is a good illustration of the attempt of politicians to carry on for the public a line of business, such as the manufacture of cement, which heretofore has been conducted by private enterprise.

Los Angeles, January 6. F. C. FINKLE.

[A copy of Mr. Finkle's letter was sent to the Los Angeles Department of Public Service and the following reply received.—EDITOR.]

The Editor:

Sir—Commenting on the communication of F. C. Finkle with regard to the operation of the Monolith cement plant, formerly the property of the city of Los Angeles and now under contract for sale to Los Angeles county, it will be necessary to present only the attached statement showing recent purchases of the Los Angeles Department of Public Service, as compared with the bids of other privately-owned competing mills, to demonstrate that the Monolith plant is still saving the city and county large sums of money. Where a contract was let, it was in each case to the lowest bidder.

The statement shows two things plainly:

First, that immediately after the municipal mill was in operation and this Department was in the market, the combine of private mills forthwith dropped their prices from $2 per bbl. f.o.b. Los Angeles to from $1.48 to $1.56 per bbl. f.o.b. Los Angeles, this price being exclusively to the city and not to private contractors. This was solely to meet the competition of the Monolith mill, and we know that, were such competition withdrawn, prices would be advanced to those charged other large consumers. This is a logical deduction because an investigation covering all recent sales, as far as could be ascertained, shows that large private contractors, who through legal obstructions are debarred from buying from the Monolith mill, are still paying from $2 to $2.10 per bbl. f.o.b. Los Angeles in 1000 bbl. lots and $1.90 per bbl. f.o.b. Los Angeles in 10,000 bbl. lots.

Generated on 2024-09-30 01:25 GMT / https://hdl.handle.net/2027/uiug.30112007838433
Public Domain, Google-digitized / http://www.hathitrust.org/access_use#pd-google
Digitized by Google
Original from UNIVERSITY OF ILLINOIS AT URBANA-CHAMPAIGN

BIDS RECEIVED BY CITY OF LOS ANGELES FOR CEMENT

Date	Bbl.	Point of delivery	California Portland Cement Co.	Riverside Portland Cement Co.	Henry Cowell Cement Co.	Oro Grande Cement Co.	Golden State Cement Co.	Los Angeles county	South-western Cement Co.
June 12, 1914..	1,500	Los Angeles	$2.00	$1.85	$1.90	$1.85	....	....	....
Aug. 18, 1914..	2,000	San Fernando	2.20	2.20	2.09	....	....	....	....
Dec. 18, 1914..	2,500	Los Angeles	2.00	2.00	1.90	....	$1.79	....	....
Jan. 19, 1915..	1,000	Saugus	2.25	2.25	2.13	....	1.94	....	....
Jan. 19, 1915..	1,500	Beverly	2.10	2.10	2.09	....	1.94	....	....
Mch. 9, 1915..	1,500	Los Angeles	2.00	2.00	1.87	2.00	1.70	....	....
April 2, 1915..	1,500	" "	2.00	2.00	1.90	....	1.85	....	....
April 16, 1915..	5,000	" "	2.00	2.00	....	....	1.70	....	....
May 18, 1915..	1,500	" "	2.00	2.00	....	2.00	....	....	....
June 18, 1915..	1,000	" "	2.00	2.00	....	....	1.65	....	....
May 12, 1916..	20,000	Mill	1.76	1.35	....	....	....	$1.21	....
May 17, 1916..	5,000	"	....	....	....	....	....	1.23	....
July 17, 1916..	6,000	"	1.32	1.25	....	....	....	1.20	....
Aug. 25, 1916..	10,000	"	....	1.25	....	....	....	1.21	....
Oct. 27, 1916..	6,000	"	1.33	....	....	....	....	....	$1.35
Nov. 8, 1916..	6,000	"	1.33	....	....	....	....	....	1.12
Nov. 24, 1916..	10,000	"	1.27	1.33	....	....	....	1.35	1.25
Dec. 5, 1916..	10,000	"	....	1.33	....	....	....	1.35	1.15
Jan. 13, 1917..	10,000	"	1.34	1.30	....	....	....	1.25	....

Second, we would call attention to the statement of your correspondent that "the city could not purchase cement from Monolith because private cement-manufacturers had been able to underbid the county." Out of a total of 77,000 bbl. of cement used by the Department of Public Service in the San Fernando Valley work, which was begun in January of last year, 62,000 bbl. has come from the Monolith plant. The remaining 15,000 bbl. was from a new mill, limited in selling by the restrictions of the Los Angeles building ordinance and by the newness of its brand. This mill's latest sales to the U. S. government were at $1.35 per bbl. f.o.b. mill.

Your correspondent is again inaccurate in stating that "city officials have never given out any figures regarding actual cost of construction." Three years ago he wrote to *Engineering News* in the same tenor as his letter to you. In its issue of February 4, 1915, *Engineering News* published his communication, with a statement of costs by O. E. Clemens, aqueduct cost accountant. It is fair to assume that your correspondent was aware of the publication of his own letter. Mr. Clemens' statement was printed on the same page.

We have no means of knowing operating costs of the mill since it passed from city management, but the fact remains that the county is selling us cement at the present time under the rates offered by competing mills.

LOS ANGELES DEPARTMENT OF PUBLIC SERVICE.

By BURT A. HEINLY.

Los Angeles, January 18.

[The statement by Mr. Clemens mentioned in Mr. Heinly's letter states that the accounts of the Aqueduct show a total cost of $1.894 per bbl. for cement, but that this included an allowance of $0.10 per barrel for depreciation on plant, all the extra expenses at the commencement of operations, and also the cost of lost sacks between March 1909 and October 1910. After October 1910, the cost of lost sacks was charged to the particular department responsible, and not to the mill. It is also stated that when the mill was running at full capacity, cement was produced at a cost of from $1.10 to $1.15 per bbl., not counting depreciation, and that if the mill had been in private ownership, unhampered by the eight-hour rule and other municipal regulations, cement could have been produced for less than $1 per bbl. No detailed figures are given. Mr. Clemens also states that out of nearly 1,000,000 bbl. produced at the mill, only about 2000 was rejected after inspection.—EDITOR.]

METHODS OF HIGHWAY ACCOUNTING

The adoption of uniform methods of cost accounting on highway work was urged by J. C. Ainsworth, president of the United States National Bank of Portland, in an address delivered at the Oregon State Commonwealth Conference. Such a system should be prescribed by the State and followed by all the counties. In this way comparison of results would be possible, and also increased accuracy of estimates. An accurate force-account on contract work makes it possible to relieve an honest and capable contractor in cases where unforeseen circumstances would ruin him if the terms of the contract were enforced rigidly. On the other hand, unfounded claims by the contractor on account of extras can be disproved by such a force-account. In this regard, Mr. Ainsworth takes the unfortunately rare position that the contractor should not be expected to do something for nothing on public work, merely because strict adherence to the terms of the contract would have that result.

Standard plans and specifications should be prepared, to permit the comparison of cost data, and also to permit the choice of the particular structure or pavement best suited to a given case. Centralized control of highway construction and maintenance is also recommended.

Generated on 2024-09-30 01:31 GMT / https://hdl.handle.net/2027/uiug.30112007838433
Public Domain, Google-digitized / http://www.hathitrust.org/access_use#pd-google
Digitized by Google
Original from UNIVERSITY OF ILLINOIS AT URBANA-CHAMPAIGN

FIG. 1 AND 2. LOADING AND DISCHARGE STATIONS.

The Spanish Peak Aerial Tramway

By J. A. KITTS*

Aerial tramways, as designed and built today, represent the application of sound engineering principles, based on experience derived from the design, construction, and operation of several thousand lines, having a total length of many thousand miles. They have become recognized as an economical and practicable means of transportation. They are especially adapted to mountainous country, and solve the problem of transportation to and from territory that is economically inaccessible by surface lines.

Aerial tramways have been built for many purposes, as indicated in the following list of notable lines:

Company and locality	Length, ft.	Capacity per hour	Material
Bethlehem Steel, Bethlehem, Pa	1,900	200 tons	limestone
O'Brien Munitions, Renfrew, Ont	900	2½ "	cotton in cans
Carnegie Steel, New Castle, Pa	3,700	150 "	flue dust
Tacoma Smelting, Tacoma, Wash	2,850	100 "	ore
Spanish Peak Lumber, Quincy, Cal	27,200	15 "	lumber
Am. Smelting & Refining, Christmas, Ariz	7,350	40 "	ore
Con. Interstate-Callahan, Wallace, Idaho	10,475	25 "	zinc concentrate
Butters-Divisadero, San Salvador, C. A	11,750	20 "	ore
Baker Mines, Cornucopia, Ore	5,500	15 "	"
American Zinc, Mascot, Tenn	1,900	60 "	"
Kennecott Mines, Kennecott, Alaska	15,150	25 "	"
Cassidy Coal, Curwensville, Pa	4,635	20 "	coal
Spring Canyon Coal, Provo, Utah	2,900	250 "	"
McKinley-Darragh, Cobalt, Ont	4,800	5 "	ore
Tomboy Gold Mines, Telluride, Colo	6,800	15 "	concentrate
Saline Valley Salt, Bishop, Cal	69,925	20 "	salt

The Spanish Peak aerial tramway is unique in that it was designed and built for the purpose of carrying sawed lumber for commercial purposes direct from the saw-mill and yard over a mountain range to a connecting railroad. This development is of particular interest since our forests are largely confined to rugged and mountainous country. The lumber company's property is at Spanish Ranch, seven miles west of Quincy, Plumas county, California, and about five miles by air-line from the Western Pacific railway. The easiest surface-line route from Spanish Ranch would be by way of Spanish creek, connecting with the Quincy Western railroad at Quincy. Spanish creek, however, is so tortuous and the general topography is so precipitous as to make it impossible to construct any type of surface-line for a reasonable amount of money. The aerial tramway was selected as the only feasible means of carrying lumber from this territory, on a commercial basis.

The saw-mill and drying-yard of the company are at Spanish Ranch, and the manufacturing plant and storage-yard are at Grays Flat, on the Western Pacific railway. The tramway connects these two points, and is a little over five miles long. It has a normal capacity of 15 tons or 10,000 ft. B.M. per hour, when running at the rate of 414 ft. per minute. This capacity may be increased somewhat by increasing the speed of the hauling-rope. The discharge-terminal is 890 ft. lower than the loading-terminal, and the tramway, when running under normal load, develops 10 hp. To utilize this power, a 15-kw. generator has been connected to the control-unit, the power generated being used for lighting and other purposes.

A maximum of 20 hp. is required when loading the line, and 15 hp. is required to brake the line when stripping. Water-power under 225-ft. head is used. The power-braking device (Fig. 4) consists of two Pelton water-motors, mounted on a concrete foundation at the

*2425 Le Conte Ave., Berkeley, California.

Generated on 2024-09-30 01:29 GMT / https://hdl.handle.net/2027/uiug.30112007838433
Public Domain, Google-digitized / http://www.hathitrust.org/access_use#pd-google
Digitized by Google
Original from UNIVERSITY OF ILLINOIS AT URBANA-CHAMPAIGN

loading-terminal. These motors are standard 24-in. units with the two shafts connected by a rigid coupling, which also serves as a double pulley for driving the two governor oil-pumps. The motors are connected in opposition. The governors are so adjusted that when the speed of the tramway drops below normal, water is admitted to the power-wheel. Should the speed go above normal (the usual tendency) water is admitted into the brake-wheel. As this motor is set in opposition to the power motor, it is obvious that the jet, instead of driving the runner, will be struck by the buckets rotating against the jet. In this manner the excess power of the tramway is absorbed. Direct-motion oil-type governors are used, the pistons of the servo-motors being mounted on an extension of the needle-stems. The speed is kept between the limits of 5% above or below normal speed.

The number of supports required by an aerial tramway depends upon the length and, also, largely upon the nature of the profile of the line. To insure the wearing life of the track-cables, the vertical angles, or curvature, must be limited. Supports of the tower type are ordinarily equipped with cast-iron saddles in which the cables rest and suitable rollers for supporting the traction-rope. In the case of long spans, or where the bend in the track-cable would be excessive with a rigid saddle, so-called compensating saddles are used, each consisting of a pair of saddles mounted on an oscillating beam, which permits the passage of the carriers without undue bending of the cable. Where sudden downward bends occur, supports are used consisting of a series of bents in close proximity, each equipped with saddles, thus dividing the total large bend into a number of slight bends. Where the bend is comparatively great, as in the case of sharp ridges, supporting structures are used in which the cables are overlaid with rails.

At one point in the Spanish Peak line a horizontal bend of 7° is made by means of a couple of supports of special design, the carriers passing through these without detaching from the traction-rope, thus avoiding the usual cumbersome and expensive structure equipped with large sheaves for deflecting the traction-rope, and requiring an attendant to pass the carriers.

There are 65 structures on this line comprising 48 simple tower-supports, as shown in Fig. 3, varying in height from 12 to 55 ft., 8 of which are equipped with compensating saddles, 2 simple angle-stations, 2 two-bent supports, 2 four-bent supports, 4 curved-rail stations, 2 double-anchorage stations, 2 double-tension stations, as shown in the background of Fig. 3, 1 anchorage and tension station, and 2 terminal stations (Fig. 1 and 2). The loading-terminal is also an anchorage-station for the track-cables, and the discharge-terminal is a tension-station for both track and hauling cables. These structures are of timber on concrete foundations. The quantity of timber used was 250,000 ft. B.M., and the quantity of concrete 600 cu. yd. The structure members are all bolted together, and the posts and struts are fastened to the concrete foundations by angle-clips placed on anchor-bolts, these clips being bolted to the timber. The structure members were completely framed and bored at the nearest terminal station, hauled to the site and erected. The foundations are mostly in earth. Four towers and two other structures are founded on rock, a partly decomposed, badly broken, and fissured slate. The slopes were steep, as shown in Fig. 3. The discharge-terminal foundations are in river-gravel. In the design of the foundations, particular attention was paid to local conditions.

The average distance between supports is 410 ft., the maximum span being 2810 ft. The track-cables are of the American Steel & Wire Co. lock-coil construction. These cables are 1⅛-in. and ⅞-in. diam. on the loaded and empty sides, respectively. A ⅝-in. diam., 6 by 7 Lang-lay cable is used for the traction rope. The working tension on the track-cables is 30,000 lb. per sq. in. of metal section. The track-cables are divided into six sections of one mile or less in length, each section being anchored at one end and weighted at the other, a constant tension being maintained in this manner. The traction-rope is a continuous loop over 10 miles long.

The carriers are specially designed for carrying lumber, the essential requirements being that the slings for holding the packages are simple and easily placed, and the loads easily dropped. It was also necessary that the lumber be protected from damage by these slings. The carrier consists of a two-wheel carriage, a rigid hanger pivoted to the carriage to allow free movement in a longitudinal direction, two chains suspended from the hanger and pivoted to allow movement in a transverse direction, these chains in turn suspending a channel-iron bolster. Guards of angle-iron section are placed on the chains, so as to protect the lumber from marring, these guards being free to move on the chain to accommodate a load from 6 to 16 in. high. The chain on one side is fastened to the channel iron-bolster, while that on the other side is made to detach from the bolster by means of a simple catch or latch. The horizontal component of the weight of the lumber, acting through the chains, serves as the only gripping device for holding the load. Two carriers are used for each load. These carriers are independent of each other and are provided with grips for attaching to the traction-rope. The Webber grip is used for this purpose. There are 164 of these carriers, also four 8-cu. ft. ore-buckets and a track-cable oiler. This is about twice as many carriers as would be put on the line at one time.

The packages may be made to contain from 300 to 700 ft. B.M. with almost any end-area dimension up to 12 by 32 in. or 16 by 30 in., and in lengths up to 32 ft. or more (see Fig. 5). The normal package is 512 ft. B.M. These packages are sent out every three minutes, making them 1242 ft. apart on the line.

Eight men are used in the operation of the line, two loaders, two dispatchers, two linemen, and two unloaders. One dispatcher attends to the machinery and equipment and the other keeps the records of loads dispatched, etc. The tramway is equipped with a

Generated on 2024-09-30 01:25 GMT / https://hdl.handle.net/2027/uiug.30112007838433
Public Domain, Google-digitized / http://www.hathitrust.org/access_use#pd-google
Digitized by Google
Original from UNIVERSITY OF ILLINOIS AT URBANA-CHAMPAIGN

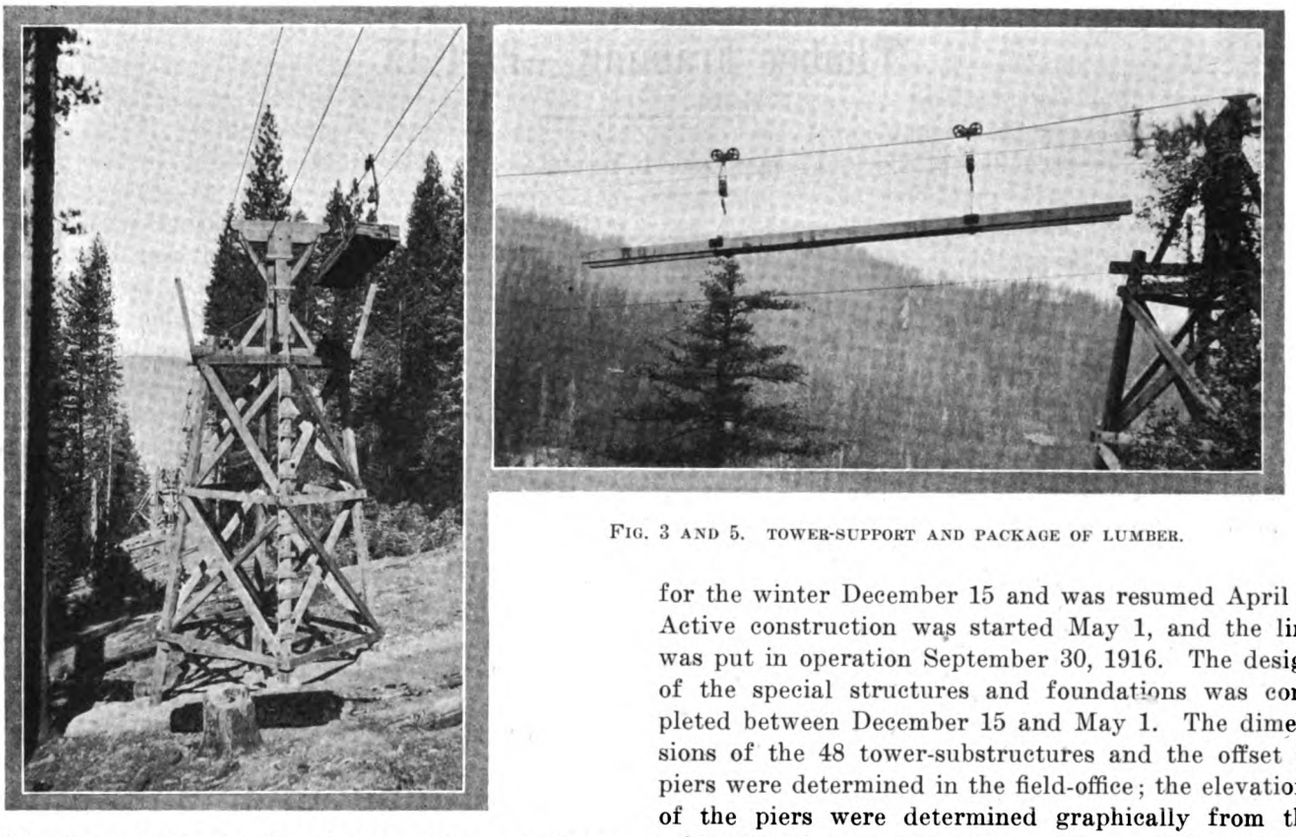

FIG. 3 AND 5. TOWER-SUPPORT AND PACKAGE OF LUMBER.

double or metallic-circuit telephone line, telephones being placed at the two terminals and at the principal stations along the line. This telephone system is used for signaling as well as for inter-communication. The telephones are of the Stromberg & Carlson make, with 2500-ohm ringers.

Actual construction required eight and one-half months. The profile survey of the line was completed in October 1915. The position of the structures was

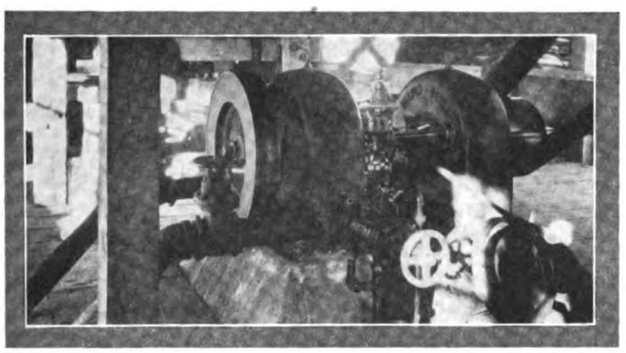

BRAKING DEVICE.

then determined, and the survey of the sites was completed in December. Clearing right-of-way was started in October 1915, and practically completed, except for the burning of 'slashings,' in December 1915. The underbrush and small growth was cleared 25 ft. on each side of the centre-line, and large trees were cleared 10 ft. on each side. All dead, leaning, and otherwise unsafe trees, which could reach the line in falling, were felled. Most of the tower heads were framed between October 1 and December 15. The work was suspended for the winter December 15 and was resumed April 1. Active construction was started May 1, and the line was put in operation September 30, 1916. The design of the special structures and foundations was completed between December 15 and May 1. The dimensions of the 48 tower-substructures and the offset of piers were determined in the field-office; the elevations of the piers were determined graphically from the cable elevations and the cross-sections of the ground; and the offset of piers, lengths of posts, girts, etc., was computed according to the type of structure and the local conditions.

The line was designed and built under the direction of F. C. Carstarphen, tramway engineer for the American Steel & Wire Co. of Trenton, New Jersey. The company furnished the cables, equipment, and all metal parts, with the exception of the power and control unit, which was furnished by the Pelton Water Wheel Co. T. J. Murphy, field engineer for the company, had charge of the erection of cables. I was field engineer in charge for the American Steel & Wire Co., and superintendent of construction for the Spanish Peak Lumber Co. L. T. Hays, F. S. Winslow, and W. B. Sawyer, Jr., of the United States Steel Products Co., of San Francisco, were concerned in the sale of the tramway and took an active interest in the solution of the various field problems. The officials of the Spanish Peak Lumber Co. are O. C. Haslett, president, and D. L. Bliss, Jr., general manager.

The coefficient of friction of bronze on bronze has been the subject of some recent experiments by the U. S. Reclamation Service. The tests were conducted on the slide-gates at the Pathfinder, Arrowrock, and Elephant Butte dams. The head on the centre of the gates varied between 50 and 125 ft. The average coefficient of friction for the opening stroke ranged between 0.31 and 0.42 for the different dams. The maximum ranged between 0.383 and 0.44. The average for the closing stroke ranged between 0.254 and 0.29, and the maximum between 0.268 and 0.34.

Generated on 2024-09-30 01:26 GMT / https://hdl.handle.net/2027/uiug.30112007838433
Public Domain, Google-digitized / http://www.hathitrust.org/access_use#pd-google
Digitized by Google
Original from UNIVERSITY OF ILLINOIS AT URBANA-CHAMPAIGN

Timber Framing—Part IX

By HENRY D. DEWELL*

Foundations

The three cardinal principles of foundation design are met when (1) the safe bearing-pressure on the soil is not exceeded, (2) all footings exert the same pressure per unit area on the soil, and (3) the individual footings are each strong enough to withstand the loads coming upon them. The fulfilment of the preceding conditions involves the careful calculation of all loads coming upon the several piers or wall-footings, and the proportioning of the details so that such piers and footings may be strong enough in all their parts to distribute the individual loads with safety.

To an engineer, these principles are so self-evident that it seems redundant to mention them at all. In structures of importance, such as bridges and steel-framed buildings, careful attention is paid to all these considerations. In timber-framed buildings, the second principle, that of providing equal bearing on all footings, is commonly neglected. The footings of a timber-framed building, unlike those of a steel-framed building, are usually the last details to be designed. The common practice is to compute approximately the maximum load on any one pier, design this pier accordingly, and either make all the others the same size, or else to establish their dimensions arbitrarily.

Proceeding along the same lines, the sills of walls are often made of the same size throughout the building, although the different walls will probably carry widely varying loads. Much of the cracking of plaster walls in dwelling-houses is on account of the unequal and often insufficient bearing of the foundation on the soil.

Foundations may be divided into two kinds for the purpose of this discussion, permanent and temporary. It is not my intention to discuss the design of permanent footings. At the present time these are usually built of concrete, either plain or reinforced. Brick is also sometimes used. Discussion of the design of concrete footings and piers may be found in the numerous texts on concrete and reinforced concrete.

When a timber post rests on a concrete footing, it may be necessary to use a steel base-plate under the post. This will serve two purposes, first, to distribute the load of the post over the concrete, in order that the safe unit compressive stress be not exceeded, and second, that there may be an impervious surface between the concrete and the ends of the fibres of the timber. With regard to the first consideration, it must be remembered that timber can safely withstand a unit pressure of 1600 to 1800 lb. per sq. in., in end bearing, while concrete should not be stressed in compression over 350 to 450 lb. per sq. in. Standard steel base-plates, of several different makes, may be purchased, or a plain plate may be used. In either case, the plate should be well painted. Further, the bottom of the post should be treated with a good brand of wood-preservative. In no case should the end of the post be allowed to rest directly upon the concrete, as moisture will attack the post, and cause decay of the timber. The standard base-plates are fabricated with lugs fitting closely around the sides of the post. If a plain base-plate is used, it will be advisable to provide a dowel, embedded in the concrete base, and extending an equal distance into both the concrete and the post. The dowel may be a short piece of round steel rod, say 1¼ in. diam. by 6 in. long, or else a piece of heavy or extra-heavy steel pipe. In general no dowel should be used with a diameter of less than one inch.

Timber Foundations. Foundations made of timber are seldom used now except for temporary structures. Not many years ago, it was a common practice in California to use timber footings for dwelling-houses. For this purpose, redwood or cedar was employed, since both these varieties of timber resist decay to a considerable extent, even when embedded in the earth. Two kinds of redwood are found in California, the Coast redwood, or *Sequoia sempervirens*, and the Sierra redwood, or *Sequoia gigantea*, the latter being used principally in the San Joaquin valley. To my knowledge, the former is generally considered the better timber of the two for use in foundations, although I am by no means sure that such opinion is based upon anything but prejudice. Good sound cedar is practically as good as redwood, although I prefer redwood myself. Here, again, the preference may be based on prejudice, as I do not know of any tests establishing the length of time either redwood or cedar will resist decay, when buried in the earth. Indeed, there are so many factors, such as quality of timber, character of soil, amount of moisture, etc., affecting the life of a timber in contact with earth, that no single series of tests would establish a definite result. Fence-posts made of redwood or cedar have withstood the ravages of decay for many years. On the other hand, I have seen some redwood posts decayed after a few years' service.

Ordinary timber, such as Douglas fir, if in contact with the soil, will rot in a short time. It may be said that one year's service is all that can be expected from such timber, provided that it is untreated. For this reason, such timber is usually treated with some wood-preservative when placed in foundations. Some of these so-called wood-preservatives are, however, almost use-

*Consulting engineer, Holbrook Bdg., San Francisco, formerly Chief Structural Engineer, Panama-Pacific International Exposition.

Generated on 2024-09-30 01:24 GMT / https://hdl.handle.net/2027/uiug.30112007838433
Public Domain, Google-digitized / http://www.hathitrust.org/access_use#pd-google
Digitized by Google
Original from UNIVERSITY OF ILLINOIS AT URBANA-CHAMPAIGN

less. Furthermore, even when using a good preservative, care should be taken to see that it is worked thoroughly into the fibres of the timber, otherwise it will not be effective. Painting the timber lightly is a needless expense, since it is of little value in adding to the life of wood exposed to underground conditions.

In the following discussion, I wish to consider briefly some details of timber footings. Fig. 70, *a*, *b*, and *c*, show some types of timber footings that I have seen used in buildings. It is hardly necessary to point out the defects in these details. It is obvious that in Fig. 70*a*, the two planks, *m*, add no strength to the footing, and serve only to tie the sticks of the lower planking together. The plank *n* must distribute the whole load of the post to the lower layer of planks. With a soil-pressure of any appreciable amount, it must deflect to such an extent that the bearing of the soil is taken almost entirely by the middle plank of the lower layer, thus increasing the soil-pressure considerably over that computed (assuming that computations were made).

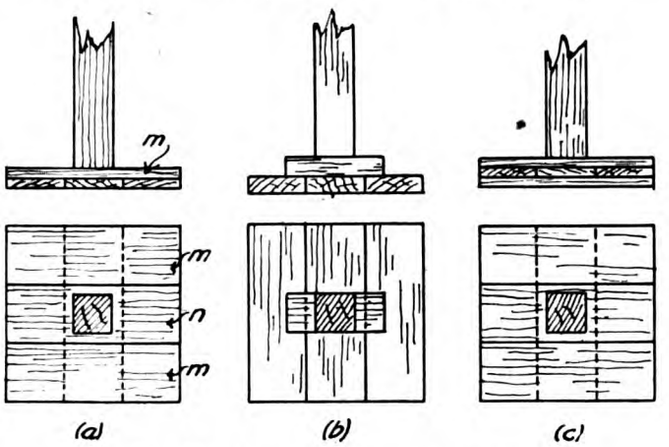

FIG. 70. TYPES OF DEFECTIVE FOOTINGS.

In Fig. 70*b*, the distributing-cap is so short that again the middle plank of the lower layer is acting as the footing. The footing of Fig. 70*c* is somewhat stiffer, on account of the three layers of planking. Further layers of planking will, of course, strengthen the footing, and in this way a detail can be constructed sufficiently stiff to distribute the load on the post uniformly over the area of the foundation, but this kind of foundation is neither efficient nor economical.

It may appear a waste of time and space to discuss such a detail, yet, as stated previously, I have seen it used extensively. Indeed, in checking the designs of the various foreign, State, and concession buildings, submitted to the Division of Works of the Panama-Pacific Exposition, I found such details quite common. The fact that these structures were not designed in any one locality would seem to indicate that this type of footing is used extensively for temporary structures.

The correct type of spread timber-footing is illustrated in Fig. 71. This detail is efficient and economical, and subject to rational analysis. Its design involves only the consideration of bearing pressure on soil and timber, and bending and longitudinal shear in timber. There is no tendency for the distributing-cap to be split by the punching effect of the post.

Fig. 72 shows a similar detail for a larger footing. The outer stringers are added to tie the bearing planks together. This figure also illustrates a typical detail for post and girder connection. The corbel shown is not for the purpose of reducing the unit bearing-pressure across the under side of the girders, but rather to allow for the possibility of the girders being cut too short to meet over the centre of the post. The 2 by 14-in. splice-pads not only tie the girders together, and so add general stiffness to the floor, but they also furnish a certain amount of end-restraint or continuity in bending to the girders, in case the actual centre lines of bearing of the girders are unsymmetrical, with regard to the centre line of the post. The 2 by 6-in. braces may or may not be necessary, depending upon the height of the floor above the ground. Such braces are an effective means of stiffening a floor against vibration from machinery. Where such bracing is necessary, the post should be braced in all directions, and it will usually be sufficient to brace only every other floor bay. For the bracing in a plane normal to the plane of the girders, the joists immediately over the post may be spaced so as to allow the batter-braces to be spiked to the joists.

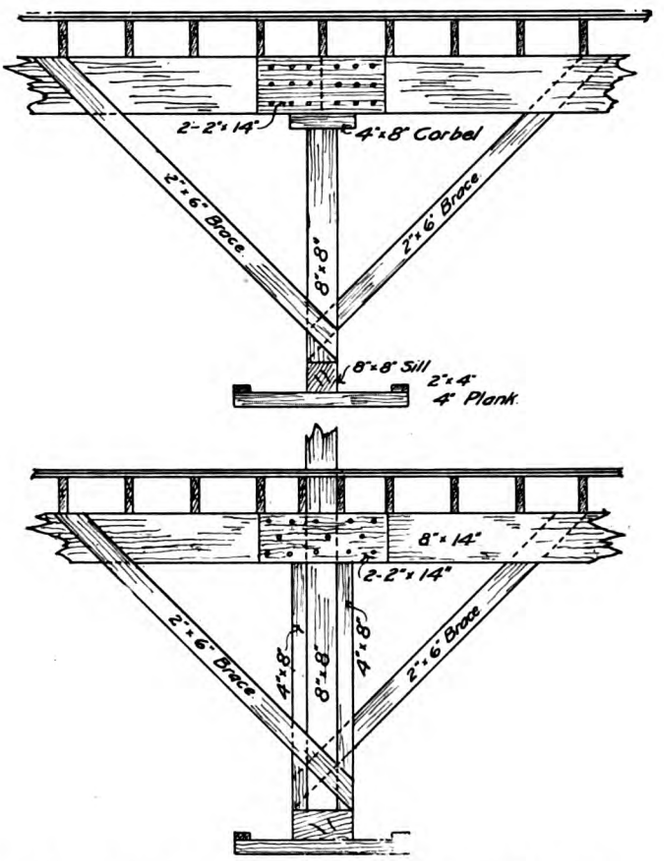

FIG. 71 AND 72. CORRECT DESIGN FOR TIMBER FOOTINGS.

In Fig. 73 there is outlined a typical timber-footing for the case of a column extending through the floor. In this detail the girders are supported by short posts

Generated on 2024-09-30 01:23 GMT / https://hdl.handle.net/2027/uiug.30112007838433
Public Domain, Google-digitized / http://www.hathitrust.org/access_use#pd-google
Digitized by Google
Original from UNIVERSITY OF ILLINOIS AT URBANA-CHAMPAIGN

alongside and fastened to the main post. A modification of this detail is shown in Fig. 74, where the short posts are eliminated, and the main post is cut to receive the girders. Because of the expense of cutting the post and the weakening of the post resulting therefrom, the detail of Fig. 73 is to be preferred. The detail

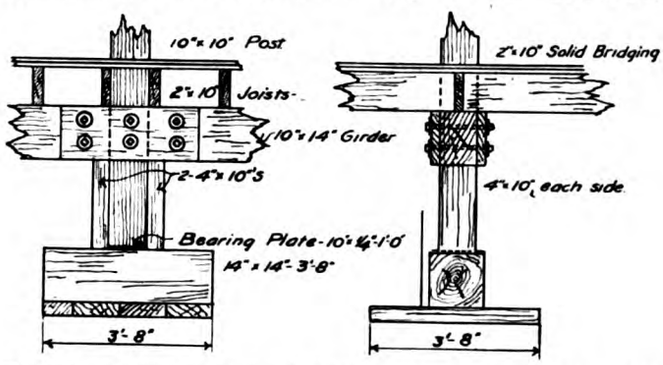

FIG. 73. TIMBER FOOTING FOR COLUMN EXTENDING THROUGH FLOOR.

computations for the design of the timber footing of Fig. 74 is given, using the typical building of Fig. 75, although such a building, unless built for very temporary purposes, would have concrete piers.

Pile Foundations. Where the conditions of soil are such that piles are necessary, the details shown in Fig. 72 and 73 may be modified by resting the bottom of the post on the top of the pile. Iu such cases, however, a bolster, either of timber or of iron, should be placed between the ends of the post and the pile, in order to prevest moisture from attacking the post.

For piles of ordinary length, it will generally be found economical to arrange the spacing of floor-bays so that

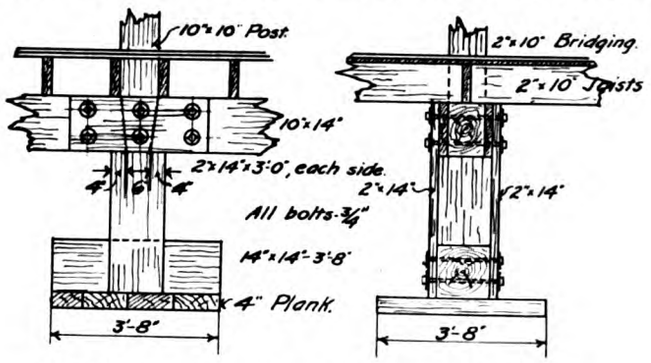

FIG. 74. MODIFICATION OF DESIGN SHOWN IN FIG. 73.

the full load-capacity of the pile may be utilized. The capacity should be determined either by test-piles or by comparison with piles used under similar soil-conditions, supplemented by borings to determine the nature of the underlying soil. Borings should be made in any event in order that full knowledge may be obtained of existing conditions. This statement applies not only to investigations to determine the capacity of piles, but also to the study of foundation conditions in the case where spread footings are to be used. Generally a pile of an average length of 40 ft., and a butt of from 12 to 14-in. diameter driven properly to refusal may be expected to carry twenty tons without settlement.

The piles may be cut off just above the ground-level, and posts used to carry the floor-girders, or the point of cut-off of the piles may be raised so that no posts are required. The question of relative cost will be the main factor in determining which method of the two will be used, and this must be computed for each individual

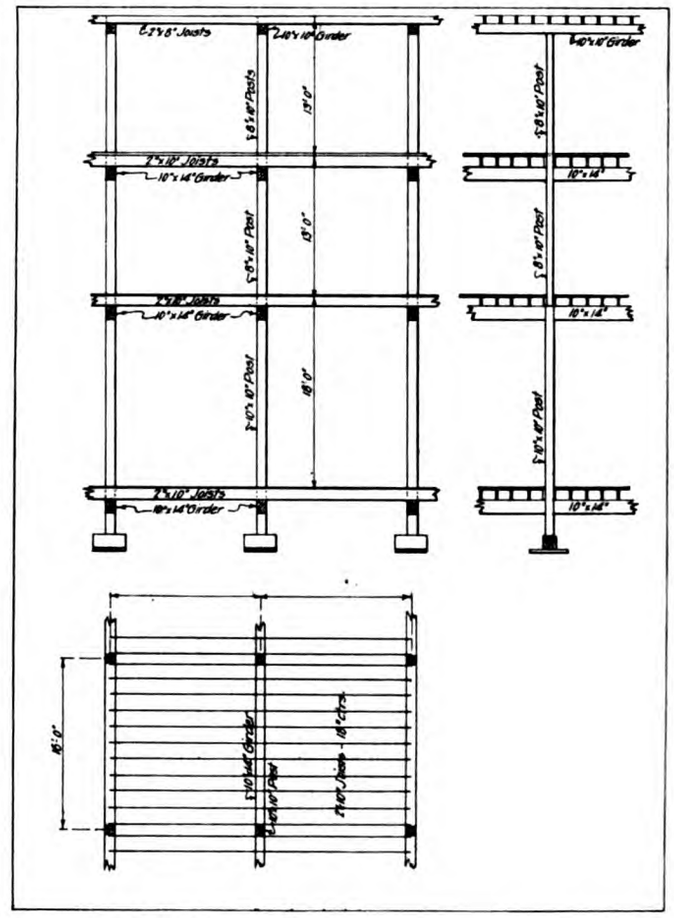

FIG. 75. TYPICAL TIMBER-FRAMED BUILDING.

COMPUTATIONS

Assuming tar and gravel roof-covering weighing 8 lb. per cu. ft. and Douglas fir weighing 3.5 lb. per ft. B.M.

Dead load of roof per sq. ft.	= 17 lb.
Dead load of floors per sq. ft.	= 15 lb.
Live load on roof per sq. ft.	= 28 lb.
Live load on floors per sq. ft.	= 85 lb.

Total dead load on footing:

Roof	= 3,800 lb.
Floors	= 10,100 lb.
Post and footing	= 1,100 lb.
Total	= 15,000 lb.

Total live load on footing, assuming that 60% reaches the footing:

Roof	= 3,760 lb.
Floors	= 34,300 lb.
Total	= 38,060 lb.
Total live load plus dead load	= 53,060 lb.

Assuming allowable pressure on soil of 2 tons per sq. ft., area required $= \frac{53060}{4000} = 13.25$ sq. ft.

Footing therefore will be 3 ft. 8 in. square.

Generated on 2024-09-30 01:24 GMT / https://hdl.handle.net/2027/uiug.30112007838433
Public Domain, Google-digitized / http://www.hathitrust.org/access_use#pd-google
Digitized by Google
Original from UNIVERSITY OF ILLINOIS AT URBANA-CHAMPAIGN

Bearing area required under post $= \frac{53060}{285} = 186$ sq. in. Use 14 by 14-in. short post.

Sill will have overhang of $\frac{44-14}{2} = 15$ in.

Load on overhang $= 4000 \times 3.66 \times 1.25 = 18{,}300$ lb.
Bending moment $= 18{,}300 \times 7.5 = 137{,}500$ lb.-in.
Requires, for bending, an 8 by 10-in. timber laid flat.
Maximum shear $= 18{,}300$ lb.

Area required for longitudinal stress $= \frac{18300 \times 3}{2 \times 150} = 183$ sq.in. Use a 14 by 14-in. sill.

Overhang of planking $= 15$ in. Load on overhang for 12-in. width $= 4000 \times 1.25 = 5000$ lb.

Bending moment $h = 5000 \times 7.5 = 37{,}500$ lb.-in. Requires a 4 by 12-in. plank for bending.

Maximum shear $= 5000$ lb.

Area required for longitudinal shear $= \frac{5000 \times 3}{2 \times 150} = 50$ sq. in., therefore a 4 by 12-in. plank is all right.

Bearing required for floor-beam.

Load $= \frac{(14 \times 16)\ (15 - [0.8 \times 85])}{2} = 9300$ lb. Depth of seat required $= \frac{9300}{285 \times 10} = 3.26$ in.

Therefore taper bottom of 10 by 10-in. column as shown.

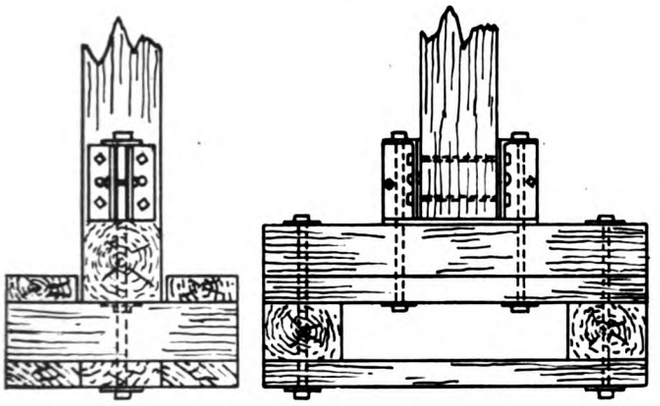

FIG. 79. TYPE OF COLUMN-ANCHORAGE.

case. Other things being equal, the first method is to be preferred, as the top of the piles, if they are cut off at any appreciable distance above the ground, are likely to be a considerable distance from their computed positions. This condition will disarrange the floor-system.

In this connection, it should be noted that 'one-pile' footings should only be used to support posts carrying no other floor than the first. For posts extending through the first story of the building and supporting some of the other floors, with the position of the posts determined by wall or girder-ties, provisions must be made for the foundation piles being at least six inches from their theoretical position. The use of a 'two-pile' footing with a wide cap will be necessary, even where the load coming upon the footing could be safely supported by one pile alone.

When uplift in the column must be considered, a condition that may occur in high, narrow structures, piles are important in providing anchorage. If the condition of the soil does not necessitate piles, the uplift must be handled either by burying the timber footing in the ground, or by using a large concrete footing to furnish the required weight. The latter condition is quite common. A timber-framed building is comparatively light. With a high narrow building, or a high building with only two or three posts in the direction of the width of the building, it may be desirable, or even necessary, to anchor the wall-columns against uplift, or else to secure the ends of the columns rigidly to the foundation. In this way the columns may be considered as practically

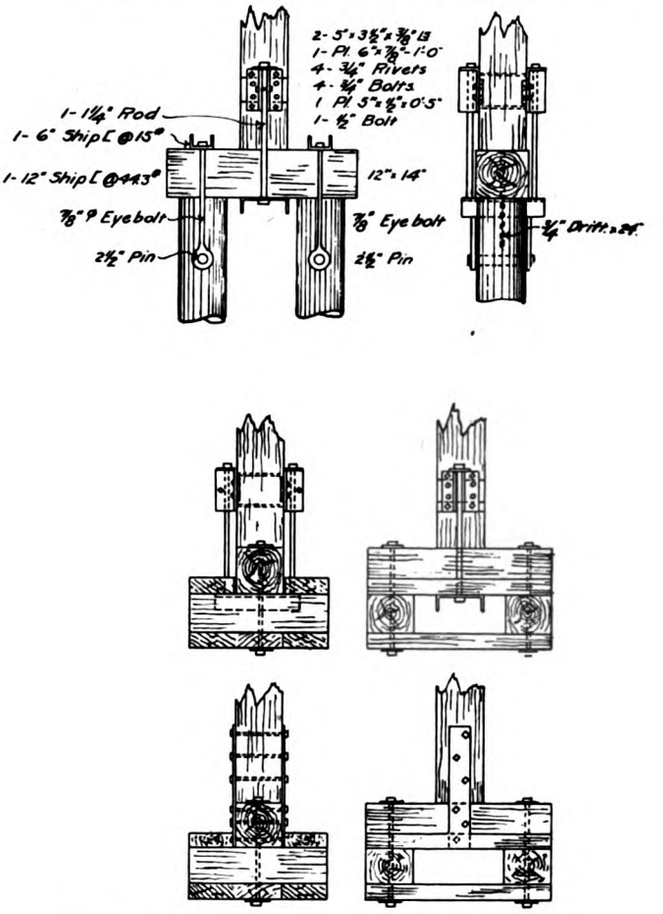

FIG. 76, 77, AND 78. TYPES OF COLUMN-ANCHORAGES.

'fixed' in the computation of stresses, and the computed stresses in the columns resulting from wind reduced accordingly.

Anchorage for Columns. For anchoring columns to the foundations, various details may be employed, ranging from the simple expedient of using two or four thin straps, bolted or lag-screwed to the post (see Fig. 76), to the somewhat elaborate detail shown in Fig. 77, 78, and 79, which is made from plates, angle-bars, and anchor-rods.

The problem of anchoring a timber post to a concrete foundation is much simpler than where the footing is constructed of timber, either of the spread-foundation type, or a grillage resting on piles. A timber foundation is subject to shrinkage, and in such cases, where anchor-rods are used, the detail of connection should be arranged so that the nuts on the anchor-rods may be tightened after the shrinkage has taken place. Anchorages of timber columns to timber grillages are unsatisfactory at the best, since it is practically impossible to

Generated on 2024-09-30 01:26 GMT / https://hdl.handle.net/2027/uiug.30112007838433
Public Domain, Google-digitized / http://www.hathitrust.org/access_use#pd-google
Digitized by Google
Original from UNIVERSITY OF ILLINOIS AT URBANA-CHAMPAIGN

keep the connections tight. With concrete piers the case is different. Anchorages of the types shown in Fig. 76, 77, and 78, with the anchor-rods or plates embedded in the concrete can be expected to remain tight irrespective of conditions.

In Fig. 79, it will be noted that there is a bed-plate underneath the column and stiffener-angles. Attention is called to the fact that if the bolts through the column are loose, it will be impossible to draw these bolts tight by screwing the nuts on the anchor-rods, as the pull of the anchor-rods is not against the column, but directly against the foundation timbers.

Tests of Concrete Specimens in Sea-Water

The results of tests of the durability of 24 concrete specimens that were immersed in sea-water at the Boston Navy yard for 7 years are discussed in the Proceedings of the American Society of Civil Engineers by R. E. Bakenhus. The specimens were 16 ft. long and 16 in. square, weighing from 4050 to 4350 lb. each. They were hung on pier No. 9 at the Boston Navy yard in such a manner that the lower ends were continually immersed and the upper ends rarely immersed. There is a 10-ft. tide at that point. The tests were made under an agreement between the Aberthaw Construction Co. and the Navy Department and the work was supervised by officers of the Navy Department.

Several standard brands of cement were used. The sand was clean and sharp and was obtained from South Acton, Mass. It weighed 97.18 lb. per cu. ft., dry. The dry sand showed 34.2% voids. When used in the work the sand contained 4.6% of moisture by weight. A sieve test showed 4.8% passing the No. 100 sieve, 24% the No. 50, 52% the No. 30, 73.4% the No. 20, 86.4% the No. 16, 91% the No. 10, 93.4% the No. 8, and 96.1% the No. 6. The stone was broken trap rock from Malden, Mass. The broken stone weighed 90.24 lb. per cu. ft., with 50% voids. A sieve test showed 1.75% passing the $\frac{1}{4}$-in. sieve, 9.75% the $\frac{3}{8}$-in., 25.25% the $\frac{1}{2}$-in., 53% the $\frac{3}{4}$-in., and 80.75% the 1-in. sieve. Water from the city system was used in mixing. All materials were measured accurately. The sand and stone were fed into the mixer and then the cement. This took about one minute. Half a minute later water was added with pails. This took about one minute. In every case, in as nearly two minutes as possible after the first water was added, the batch was dumped from the mixer. It took from 15 to 18 minutes to place a batch entirely in the forms, into which it was thoroughly spaded and tamped. The specimens were cast in a horizontal position. Eight specimens were cast using a 1:1:2, three using a $1:2\frac{1}{2}:4\frac{1}{2}$, and thirteen using a 1:3:6 mixture. Varying proportions of water were used.

The specimens were examined every year. At the end of the seven-year period they were examined and graded by R. J. Wig of the U. S. Bureau of Standards and L. R. Ferguson of the American Association of Cement Manufacturers. The richer mixtures showed less deterioration in every case than the leaner mixtures. The wet mixtures were superior to the dry mixtures in every case. The specimens that were the most durable also happened to be those made with cement containing the smallest proportion of alumina. There seemed to be no relation between magnesia content and durability, although some of the most durable specimens were made with cement having a low proportion of magnesia. One specimen was mixed with sea-water, but was lost overboard at the end of two years. At that time it appeared to be in as good condition as a similar specimen mixed with fresh water. A specimen made with cement containing 10% of hydrated lime showed considerably more deterioration than similar specimens containing no lime. A specimen mixed with cement containing about 5% clay showed less deterioration than similar specimens mixed with pure cement. One specimen was mixed with water to which Sylvester wash containing $1\frac{3}{4}$ lb. light-colored soap to 15 gal. water had been added, also 3 lb. powdered alum to one bag of cement. This specimen was not so durable as similar specimens mixed with plain water and cement.

At the end of seven years, 6 of the 24 specimens were found to be in good condition, showing practically no deterioration. These were all a 1:1:2 mixture. The best specimen was made with a mixture of Helderberg and Lehigh cement containing 5.61% Al_2O_3 and 2.51% MgO. The amount of water used was 11.7 lb. per cu. ft. of concrete. The other specimens in this class were mixed with 10.2 to 12.5 lb. of water per cu. ft., being all in the 'wet' or 'very wet' class. Four of the remaining specimens were classified as in satisfactory condition, although showing slight disintegration. One of these was a 1:1:2 mixture, one $1:2\frac{1}{2}:4\frac{1}{2}$, and two 1:3:6. All were mixed wet or very wet, the amount of water ranging between 10.2 and 12.2 lb. per cu. ft. of concrete. In stating these proportions of water, no account is taken of the moisture present in the other ingredients.

Stresses in flag-poles have recently been studied by the Bureau of Yards and Docks of the Navy Department. Two sizes of flags were used, one $3\frac{1}{2}$ by 5 ft. and one $2\frac{1}{2}$ by $4\frac{1}{4}$ ft. The flags were tried in wind velocities ranging from 20 to 60 miles per hour, and the results showed that the total horizontal resistance of a flag exposed to a steady wind can be represented by the formula, $R = CAV^{1.9}$, where R = resistance in pounds, A = area of flag in sq. ft., V = velocity in miles per hour, and C = 0.00030 for ordinary-sized flags. The value of C decreases slightly as the size of the flag increases.

Generated on 2024-09-30 01:24 GMT / https://hdl.handle.net/2027/uiug.30112007838433
Public Domain, Google-digitized / http://www.hathitrust.org/access_use#pd-google
Digitized by Google
Original from UNIVERSITY OF ILLINOIS AT URBANA-CHAMPAIGN

Proposed Irrigation Project on Kings River, California

From an irrigation standpoint, Kings river is one of the most important streams in California. The first canals were constructed in the early seventies, and development continued until at the present time 600,000 acres of land is irrigated, most of which, without irrigation, would be either practically useless, or else devoted to precarious dry-farming. Of the irrigated area, somewhat over 100,000 acres is in the Alta irrigation district. The rest of the land is served either by large private canal-companies or smaller co-operative concerns.

Up to the present time there has been no storage on the river, the canals relying entirely upon the unregulated flow of the stream. With the increase of population of the country has come an increased demand for water, until at present it is only in the exceptionally wet years that there is enough water for all users throughout the irrigating season. It has been recognized that by the construction of storage reservoirs the irrigated area could be increased considerably and a more reliable supply secured for the land now irrigated. With this in mind, L. A. Nares and I. Teilman, who are interested in the Fresno Canal & Irrigation Co., which supplies water to a large part of the irrigated area, obtained control of a reservoir-site at Pine Flat, four miles from Piedra, the terminus of a branch line of the Atchison, Topeka & Santa Fe railroad. They have offered to turn over this site to an irrigation district to comprise all the land irrigated or capable of irrigation from Kings river. The project also includes purchase by the district of the canal systems now operating. If the district is not formed to take over the reservoir-site, Mr. Nares states that the dam will be constructed by private capital. Louis C. Hill of Los Angeles, consulting engineer for the U. S. Reclamation Service, has examined the project and submitted a report. An abstract of Mr. Hill's report follows:

A reservoir containing 600,000 acre-feet has been selected as the most practicable. With this amount of storage, 1,700,000 acre-feet could be drawn except during a few years. Taking the records from 1896, the years showing deficits under these assumptions are as follows:

Year	Deficit, acre-feet	Year	Deficit, acre-feet
1898	685,000	1908	271,800
1899	481,200	1912	351,600
1900	410,300	1913	760,500
1905	129,600		

The deficit for 1905 could have been wiped out and for the other years reduced materially by running the pumping-plants to be constructed in connection with the project, an increased length of time during the season. These pumping-plants are to deliver 300,000 acre-feet in ordinary seasons, making 2,000,000 acre-feet in all. Assuming a duty of water similar to that which is now customary in the region, this will supply 1,000,000 acres gross, or 850,000 acres net after making the usual deductions for highways, buildings, farmyards, and other unirrigated areas. The maximum shortage below this amount would have been 28.9% in 1913. This shortage for a single year in a region where the ground-water level is close to the surface would not have been serious. Study of the demand curves for the systems now in operation show that 3% of the year's supply of water is used in February. The amount rises with each month until June and July each take 20% of the entire amount. Only a small amount of water is used after September 20.

The site of the proposed dam is at Pine Flat 30 miles east of Fresno and 4 miles up-stream from Piedra. The dam would be approximately 320 ft. high, and would be curved up-stream with a radius of 1450 ft. It would contain 1,050,000 cu. yd. of concrete. Rock can be obtained in large quantities near the site. Transmission lines of the San Joaquin Light & Power Co. run within four miles of the dam-site, and the company has offered to furnish power at 0.6c. per kilowatt-hour.

The following estimate of the cost of portland-cement concrete per cu. yd. has been prepared. Crushed rock is assumed to cost $1 per cu. yd., sand $0.40 per cu. yd., and portland cement $2.10 per barrel.

Mixing:	
Operation, labor	$0.045
Operation, repairs, labor	0.045
Operation, supplies	0.005
Power	0.005
Tail-rope haulage	0.02
Depreciation	0.075
Total	$0.195
1:2:4 mixture:	
Mixing	$0.195
Cement (1½ bbl.)	3.15
Crushed rock and gravel	0.84
Sand	0.105
Total	$4.29

Assuming 20% 'plums,' the cost of concrete at the cable will be:

20% at $1.50 per cu. yd	$0.30
80% at $4.29 per cu. yd	3.43
Total	$3.73
Forms	0.25
Hauling by cable	0.25
Placing, cleaning, etc	0.35
Total for 1:2:4 mixture	$4.58

Similarly the cost of a 1:3:6 mixture is computed to be $3.87 per cu. yd. Assuming that 10% of the en-

Generated on 2024-09-30 01:29 GMT / https://hdl.handle.net/2027/uiug.30112007838433
Public Domain, Google-digitized / http://www.hathitrust.org/access_use#pd-google
Digitized by Google
Original from UNIVERSITY OF ILLINOIS AT URBANA-CHAMPAIGN

tire mass is a 1:2:4 mixture and 90% a 1:3:6, the cost is as follows:

10% at $4.58	$0.458
90% at $3.87	3.482
	$3.94
Field engineering and inspection	0.06
Miscellaneous overhead	0.30
Grand total	$4.30

If sand cement, such as was employed in the construction of the Arrowrock and Elephant Butte dams, is used, the cost per cu. yd. can be reduced. A mixture of 60% sand and 40% cement is recommended. The cost of such sand cement would be $1.15 per bbl. Assuming that the dam would be composed of 10% of 1:2:4 portland-cement concrete, 10% of 1:2:4 sand-cement concrete, and 80% of 1:3:6 sand-cement concrete, the average cost per cu. yd. would be $3.57.

The total cost of storage works is estimated as follows:

Preliminary expenses, surveys, etc.	$15,000
Boring, test pits, etc.	15,000
Right-of-way	200,000
Changing flume of lumber company	200,000
Excavation for dam	325,000
Portland cement masonry, 1,050,000 cu. yd. at $4.30	4,515,000
Cement-gun work	15,000
Grouting	20,000
River diversion	30,000
Spillway	200,000
Roads	50,000
Extension of railroad and side-tracks	100,000
Hospital	10,000
Liability insurance	50,000
Power sub-station	15,000
Camp expenses	30,000
Regulating-gates, etc.	400,000
Pumping, lighting, etc.	10,000
Drainage and well drilling	15,000
Total	$6,215,000
Interest during construction	750,000
Grand total	$6,965,000

If sand cement is used, this cost could be reduced to $6,198,000. These estimates are based largely upon actual construction costs at the Elephant Butte dam and a comparison of conditions at the two places.

As already noted, it is proposed to supplement the river-flow by drilling wells in the Kings River delta. It is estimated that not less than 25% of the surface water placed upon the land passes down below the plant-roots, but can be recovered by the use of pumps during the irrigation season. This amount is estimated at 500,000 acre-feet per year. Assuming that the wells will draw water from 500,000 acres, that the allowable vertical range of the water-table is 15 ft., and that the earth contains 20% voids, the total storage available is 1,500,000 acre-feet. A draft of 300,000 acre-feet is assumed in normal years, this amount being increased in seasons when the river-flow is deficient. In this way it will be feasible to keep the total supply available from both river and wells at 2,000,000 acre-feet per year, except in years of extraordinary drought, occurring at intervals of fifteen years or more. The construction of enough additional pumping-plants to handle the deficiency in unusual years would be too expensive to be justified.

The construction of these wells and pumping-plants would be useful not only in providing additional water for irrigation, but also in helping to drain land that has become impregnated with alkaline salts through the rising of the water-table. Nearly all of this land can be reclaimed if the water-table is kept at no less than six or eight feet from the surface.

The maximum demand on the proposed pumps during any one month would be 21% of 300,000 acre-feet or 63,000 acre-feet, or 1050 second-feet. To pump this amount of water will require 525 plants, each with a 15-hp. motor. As a reserve for breakdowns, and during periods of shortage in the gravity supply, 80 more pumping-plants would be constructed with a total capacity of 160 second-feet. In years of drought all the pumping-plants could be run continuously during the irrigating season, yielding 484,000 acre-feet instead of the normal amount of 300,000. Power to operate these plants could be generated at the dam without interfering with the storage uses of the reservoir. The maximum amount of power required after allowing for transmission and other losses would be 10,500 kw. at the dam. Arrangements could probably be made with the San Joaquin Light & Power Co. for the disposal of surplus power.

The estimated cost of each well and pumping-plant is as follows:

Motor	$315
Pump	660
Foundation	20
Wiring, etc.	50
Derrick	35
Well	1,275
Pump-house	150
Transformers	150
	$2,655
Engineering and contingencies	345
Total	$3,000

At this rate the 605 pumping-plants would cost $1,815,000. The estimated cost of construction of the entire system would be as follows:

Storage works	$6,965,000
605 pumping-plants, complete	1,815,000
Transmission lines	150,000
Power-plant at dam	600,000
Total	$9,530,000

With 1,000,000 acres in the district this would give a charge of $9.53 per acre.

If sand cement is used in the construction of the dam, the cost of storage works could be reduced $767,000, making the total cost $8,763,000, and bringing the cost per acre down to $8.76.

Generated on 2024-09-30 01:28 GMT / https://hdl.handle.net/2027/uiug.30112007838433
Public Domain, Google-digitized / http://www.hathitrust.org/access_use#pd-google
Digitized by Google
Original from UNIVERSITY OF ILLINOIS AT URBANA-CHAMPAIGN

The Causes of Cracks in Cement-Concrete Pavements*

By A. T. GOLDBECK†

When the internal stress in a material reaches the ultimate strength, failure ensues, and manifests itself in various ways. In a brittle material like concrete, a crack indicates that the ultimate internal resisting-stress, whether it is tension, compression, or shear, has been exceeded. Therefore, in order to analyze the cause of cracks in a concrete pavement, we must first discover the cause of the high internal stresses resulting in rupture. This is a difficult task as the internal stresses in concrete and reinforced concrete pavements are complex and may be caused by a number of different phenomena acting simultaneously.

A concrete-road slab is attacked by many forces which slide it, in part or as a whole, along its sub-base; which bend it and warp it; which subject it to impact and shear, and which may even act within its interior to exert a disrupting effect. It is no wonder that concrete roads crack, since, because of the lack of experimental data, they are constructed without sufficient knowledge of the forces to which they will be subjected.

Let the life of a slab in the road be studied from the day it is poured, in order that the complexity of stresses to which it is subjected may be studied. For about ten days or two weeks after the slab is laid and while the concrete is hardening, it is the practice, for several reasons, to keep the surface thoroughly wet. In the first place, water is necessary to hydrate the more inactive particles of cement, and, moreover, it has been discovered that as long as concrete is kept wet, its length changes but little, provided the temperature remains constant. Any slight change that does take place because of moisture is favorable to the integrity of the concrete, since moisture expands concrete, and tends to produce small compressive stresses, on account of the frictional resistance at the sub-base against this expansive movement. Should the temperature rise during this initial period, additional expansion will result, with increased compressive stress in the concrete. Even this combined compressive stress, however, is seldom likely to be large during the initial stages of hardening, and may be neglected, as the concrete is generally sufficiently strong in compression to withstand the small forces then being exerted. Should there occur a large decrease in temperature during this initial period, the concrete will contract, causing it to move with respect to its sub-base. The forces of friction thereby developed produce tension, and as green concrete is weak in tension, a decrease in temperature, when the pavement is only a few days old, may cause cracks.

Suppose the pavement survives this initial period without mishap and is thrown open to traffic. Immediately it begins to dry out and consequently starts to shrink. The friction forces at the base resist this shrinkage immediately. The result is tension in the concrete. If the tension is too great, the concrete cracks where the tensile strength of the concrete has been exceeded. As the seasons of the year succeed one another, the slab is alternately wetted and dried, and in addition, subjected to a wide range of temperature, being thus kept in constant motion over its sub-base. The forces of friction are therefore in constant action resisting this motion, and thus cause stresses, now tensile, now compressive, to exist in the concrete. Should the forces of friction be sufficiently great, the resistance of the concrete is overcome and it fails, either in tension or compression, with one of two results, the concrete is cracked, or else bulges or is crushed. Sometimes moisture and temperature aid one another, and sometimes they counteract one another, but their activities are never ended during the existence of the road. Naturally, as friction can best be developed along the length of the road, temperature changes and moisture are promotive of transverse cracks rather than longitudinal cracks.

In addition to direct compressive and tensile stresses, road slabs are subjected to bending, because of the loads resulting from traffic and more often to unequal settlement of the sub-base, caused by lack of homogeneity. Non-uniform reaction between the slab and the sub-base on account of frost may also produce cracking, the slab then being supported in some spots and not in others, thereby causing large tensile stress in bending. Frost action is more likely to cause longitudinal cracks than transverse cracks. The expanding and shrinking of the sub-base, because of varying moisture content, tends also to produce bending stresses and consequent cracking in the concrete.

The causes of cracking can best be classified as follows:

(1) Expansion and contraction.
  (a) Change in temperature.
  (b) Change in moisture content.
(2) Non-uniform bearing under the slab.
  (a) Frost action.
  (b) Lack of homogeneity in sub-base.
  (c) Moisture expansion and shrinkage of the sub-base.
(3) Bending resulting from heavy loads and impact.

Expansion and Contraction

Change in Temperature. It has been established by

*Paper presented at the meeting of the American Association for the Advancement of Science, December 29, 1916.

†Engineer of Tests, Office of Public Roads and Rural Engineering, U. S. Department of Agriculture, Washington, D. C.

Generated on 2024-09-30 01:26 GMT / https://hdl.handle.net/2027/uiug.30112007838433
Public Domain, Google-digitized / http://www.hathitrust.org/access_use#pd-google
Digitized by Google
Original from UNIVERSITY OF ILLINOIS AT URBANA-CHAMPAIGN

several investigators that concrete expands and contracts as the temperature changes, and that the amount of movement equals 0.0000055 inch per inch of length. If a concrete road is built in the summer when the temperature is 90° F. and the temperature in the following winter falls to 0° F., the concrete must contract an amount equal to $0.0000055 \times 90 = 0.00495$ in. per in. of length. This contraction would do no harm if it were not for the resistance offered by friction between the sub-base and the slab. When the concrete contracts, the friction at the base resists the contraction and the amount of tension produced in the concrete is dependent on the amount of friction acting. Friction at the base varies with the kind of base and the degree of roughness. Tests recently made by me throw some light on the amount of friction that can act at the sub-base when the slab expands and contracts.

These tests were made by sliding 6 in. by 2 ft. by 6 ft. concrete slabs along previously prepared sub-bases. The sliding force was applied by means of a long lever. The magnitude of the force was measureed with a carefully calibrated dynamometer. The amount of movement of the slab was read with a Berry strain-gauge. The load was increased slowly and steadily.

As the load was applied, the slabs seemed to move slightly, even at the first application, except where a sub-base of large broken stone was used. In this instance a large load was necessary to start the slab in motion after which it required little more load than some of the other bases. Apparently there is no constant value for the coefficient of friction, for the greater the displacement the greater the force of friction becomes.

The values of the frictional resistance at various displacements are given in the following table:

Change in Moisture Content. When a specimen of concrete is permitted to harden under continually moist conditions, it expands slightly. On the other hand shrinkage takes place when it hardens in a dry atmosphere. The amounts of expansion and contraction are dependent to some extent on the richness of the mixture and also on the thoroughness of the drying. Specimens were made of 1:2:4 and 1:3:6 concrete of very wet and very dry consistence. Several days after hardening, they were immersed in water and extensometer readings were made on them at frequent intervals. As long as they were wet they remained expanded, with a maximum expansion of 0.0001 in. per in. of length. After 6 months, they were removed from the water and allowed to dry in the warm dry air of the laboratory. They immediately began to contract, reaching an ultimate contraction of 0.0008 in. per in. of length. It must be remembered, however, that these specimens became exceedingly dry in a short time after their removal to the air of the laboratory and probably much dryer than they could ever become in the road. When specimens are subjected to every-day wet and dry weather-conditions, there is no great change in length because of change in moisture content, because the moisture content does not vary greatly under such conditions. Under exceptional conditions concrete in the road may be made to suffer extreme drying, but it is probable that most concrete roads absorb considerable water by capillarity from the sub-base. Moreover the water that is absorbed during a period of wet weather does not evaporate completely during a period of dry weather. However, there is sufficient evaporation from the surface to cause some shrinkage of concrete in the road. This is shown by the formation of cracks when road-slabs are allowed to dry too quickly. The maximum amount of shrinkage that concrete can reach is 0.0008 in. per in. of length, but it is probable that, in general, the moisture shrinkage of concrete road-slabs does not exceed 0.0004 in. per in. of length.

FRICTIONAL RESISTANCE OF CONCRETE ON VARIOUS SUB-BASES

Kind of base	Movement	Force	Coefficient	Movement	Force	Coefficient	Movement	Force	Coefficient
Level clay	0.001	480	0.55	0.01	1130	1.3	0.05	1800	2.07
Uneven clay	0.001	500	0.57	0.01	1120	1.29	0.05	1800	2.07
Loam	0.001	300	0.34	0.01	1030	1.18	0.05	1800	2.07
Level sand	0.001	600	0.69	0.01	1080	1.24	0.05	1200	1.38
¾-in. gravel	0.001	450	0.52	0.01	960	1.10	0.05	1100	1.26
¾-in. broken stone	0.001	380	0.44	0.01	800	0.92	0.05	950	1.09
3-in. broken stone	0.001	1060	1.84	0.01	1550	1.78	0.05	1900	2.18

When the slab on the loam base had been slid 0.035 in. the then existing load of 1600 lb. was reduced to zero, and the slab recovered 0.017 in. of its motion. From this it is seen that the sub-base acts in a somewhat elastic manner, and some of the resistance offered to the expansion and contraction of the slab must be that necessary to deform the sub-base. The material of the sub-base is far from being perfectly elastic. It must therefore yield gradually under a slowly applied load such as would exist in the expansion and contraction of concrete pavements. Hence it is improbable that the maximum friction shown in the tests described actually exists in concrete pavements, even where their movement is large. The above tests were made in periods of about 10 minutes each, while the corresponding movements in the road might take days.

Where concrete has dried and contracted and has then been re-immersed in water, expansion takes place, small at first, but finally amounting to three or four ten-thousandths of an inch after a few weeks. The moisture, however, does not expand the concrete back to its original length, falling short of this by several ten-thousandths.

Combined Moisture and Temperature Changes. It is evident, therefore, that both moisture and temperature cause creeping of the slab in the road. It must be realized that the relative magnitude of these two effects depends on the range of temperature, on the rainfall,

Generated on 2024-09-30 01:26 GMT / https://hdl.handle.net/2027/uiug.30112007838433
Public Domain, Google-digitized / http://www.hathitrust.org/access_use#pd-google
Digitized by Google
Original from UNIVERSITY OF ILLINOIS AT URBANA-CHAMPAIGN

and on the drainage of the sub-base. With an exceptionally well-drained sub-base and in a dry climate, the moisture shrinkage of the concrete will be large, and will be added to the contraction resulting from changes of temperature. This shrinkage may amount to 0.0004 in. per in. of length. If there is a decrease in temperature of 100° F. there will be an additional shrinkage of $100 \times 0.0000055 = 0.00055$ in., giving a total shrinkage of 0.00095, or, roughly, 0.001 in. per in. of length. On the other hand there may be much moisture in the sub-base that will keep the concrete expanded 0.0001. The net shrinkage will then equal 0.00055 minus 0.0001 or only 0.00045 inch.

It has been pointed out that the sliding of concrete along the sub-base develops frictional resistance of considerable magnitude. When the tension developed in the concrete, because of the forces of friction, exceeds the tensile strength of the concrete, a crack must form. Let the coefficient of friction be equal to 1, and assume the tensile strength of the concrete to be 150 lb. per sq. in. Let L equal the distance between cracks. Then, in a slab 6 in. thick and 12 in. wide, the stress at rupture is $72 \times 150 = 10{,}800$ lb. This stress must be supplied by the forces of friction acting over the distance between cracks, or $fLw = 72 \times 150$ where w equals the weight of the concrete per linear foot of slab. This equation reduced to $72L = 72 \times 150$ or $L = 150$ ft., the distance between cracks. If $f = 2$ then $L = 75$ ft., so that the greater the friction the closer will be the spacing between cracks.

The above calculations indicate the advisability of forming the sub-base as smoothly as possible. Of course, the tensile strength of the concrete cannot be realized unless the concrete is stretched sufficiently. When a stress of 150 lb. per sq. in. exists in the concrete, each inch is stretched $150/3{,}000{,}000 = 0.00005$ in. It has been shown that the shrinkage due to moisture and temperature change may amount to 0.00095 in., considerably more than the amount required to cause rupture.

The foregoing considerations are based on mature concrete. When the concrete is only a few days old, the tensile strength is small, and the modulus of elasticity is likewise low. When but two days old the tensile strength may be as low as 50 lb. per sq. in., and the modulus of elasticity in tension may be only 1,000,000. The shrinkage required to produce rupture is then $50/1{,}000{,}000 = 0.00005$ in. per inch. If the tensile strength at two days is only 50 lb. per sq. in., the distance between cracks, when the concrete contracts sufficiently, will be smaller than it is if the concrete cracks at a later period when it has attained higher strength. Assuming the same values for friction and weight of concrete as before we have

$$fLw = 50 \times 72, \text{ or}$$
$$1 \times L \times 72 = 50 \times 72$$
$$L = 50$$

if the coefficient of friction equals 1. It may happen because of a big fall in temperature just after the concrete has hardened and the tensile strength is exceedingly low, that the cracks will be closer together than the above figures show. There are also cases when the sub-base contains projections and depressions that add greatly to the frictional resistance offered to sliding. Such a sub-base aids in the production of cracks at close intervals.

Field Measurements. In order to gain some idea of the actual changes in length which take place in the road slab in place, many field measurements have been made by the Office of Public Roads and Rural Engineering. On a 300-ft. section of the Ohio Post Road the expansions and contractions followed the temperature changes closely. On another stretch of road, however, at the bottom of two steep grades, with poor drainage, the expanding effect of moisture was plainly evident. It is thus seen that both moisture and temperature cause cracking. Sometimes the moisture effect and at other times the temperature effect is the most important, depending on the climatic conditions and the character of the drainage.

Uniform Bearing Under the Slab. Irrespective of what may cause lack of uniformity of bearing under the slab, let it be assumed that this unequal support exists. As an exaggerated case let it be assumed that the slab is supported mainly at its two sides, and acts therefore as a simple beam. Assume a 16-foot roadway 6 inches thick. The fibre stress in the section of greatest bending moment then equals $S = \frac{Mc}{I} = \frac{WL}{8} \times \frac{6}{bd^2} = 384$ lb. per sq. in. This value is close to that of the modulus of rupture of the kind of concrete used in road construction. The dead weight of the pavement alone is thus almost sufficient to cause cracking if the slab is afforded improper support. The same condition would hold if the pavement were unsupported at the sides but supported at the centre. Adding the weight and impact of the traffic to the dead load, it will be readily seen that under certain conditions of poor sub-base support, a longitudinal crack is likely to form.

Before considering those conditions producing improper support, let the amount of deflection of the slab at rupture be figured. In a simple beam uniformly loaded, the deflection at the centre $D = \frac{5}{384} \frac{WL^3}{EI}$. Assuming a 6-in. slab, 16 ft. wide and supported at its sides, the deflection under its own weight equals 0.164 in. The slow yielding or 'flow' of concrete acts to increase this figure and might even treble it, thereby making the possible deflection as much as 0.5 in. when the crack forms.

Regarding the causes of unequal bearing, nothing definite can be stated. It is generally recognized that unequal compacting of the sub-base due to lack of homogeneity and to non-uniform rolling may cause more settlement in some spots than in others. Many sub-bases built of old Telford or macadam roads are likely to lack uniformity. Again the well-known expansive effect of freezing can readily act with different intensity in different parts of the road, thereby causing more than enough rise to produce cracking. The shrinkage of soils when they become dry and their swelling when moistened is an occurrence of every-day observation, and it is quite

Generated on 2024-09-30 01:26 GMT / https://hdl.handle.net/2027/uiug.30112007838433
Public Domain, Google-digitized / http://www.hathitrust.org/access_use#pd-google
Digitized by Google
Original from UNIVERSITY OF ILLINOIS AT URBANA-CHAMPAIGN

possible that the shrinkage of the foundation away from the concrete is sufficient to cause great bending stress in places with the formation of cracks in the concrete. The raising of the sub-base in spots need not be more than 0.2 inch to cause cracking and the expansive effect of the frost and the swelling and shrinkage effect of moisture on the sub-base may be considerably more than this. I have now some experiments in progress to show the effect of freezing and moisture on the vertical movement of the road.

Impact of Traffic. The weight of traffic serves but to accentuate the stresses resulting from the other physical causes. Heavy loads on a thin slab or where the bearing is non-uniform may cause either transverse or longitudinal cracks. When these loads are applied suddenly or with impact as is the case with the modern heavy truck and steel-tired trailer, these loads will aid the other causes of cracking, although alone they may not be severe enough to cause it. Traffic often breaks off the corners of slabs, the load in this case being concentrated near a point having poor bearing.

In conclusion, it must be emphasized that every effort should be exerted to protect the concrete during its initial stages of hardening. Do not mix it any wetter than necessary to obtain smooth, yet economical construction. Protect it from sudden decrease in temperature and keep it wet for at least two weeks in order to prevent undue shrinkage while the concrete is green. Much attention should be given the sub-base, for, as has been pointed out, the friction at the base causes transverse cracks. This friction may be reduced greatly by proper care in the preparation of the sub-base. In this way the cracks may be widely distributed if not eliminated entirely. In addition, provide proper drainage to keep the sub-base as dry as possible, so that the effect of frost and the settlement due to moisture may be eliminated. Finally, design the slab thick enough for the loads it is supposed to carry, irrespective of the character of the sub-base.

REVISIONARY SURVEYS OF SAN FRANCISCO BAY

The U. S. Coast and Geodetic Survey has commenced a revisionary survey of San Francisco bay and entrance.

The work will consist of a wire-drag survey, which will include the north channel and the entire inside of the bay from Point Avisadero to The Brothers, to determine if there are any rocks or other dangers that were not discovered in former surveys with the sounding-lead. The positions of all prominent objects around the bay, such as stacks, towers, steeples, etc., will be determined by triangulation. The shore-line will be re-run to show all changes and improvements, such as new wharves and docks. Current observations will also be made. The work will take about three months.

The party making this survey has just returned from Alaska, where it has been engaged during the past summer in a wire-drag survey of some of the principal channels.

TILE-DRAINAGE FOR IMPROVING ROAD-BED CONDITIONS

Vitrified tile has been used on the Missouri Pacific railroad for drainage of wet cuts and water-pockets. The results are summarized by W. C. Curd, drainage engineer for the company, in Bulletin No. 189 of the American Railway Engineering Association as follows:

The investigation showed a remarkable benefit to have been derived through the strengthening of road-bed where drains had been constructed properly. Estimates indicate a return of 50 to 200% per year in the decreased cost of maintaining line and surface on the short pieces of track that were drained. The failures were found to be due principally to poor construction. The necessity for tiling cuts comes from neglect to provide and maintain adequate surface-drainage. Just as efficient, if not better, track could be developed if cuts were protected by intercepting and side-ditches properly constructed and maintained, but tile seems to afford the only practical relief where the road-bed has become water-soaked and too soft to sustain the loads. Drains should be laid with bell-end vitrified salt-glazed sewer-pipe of 6-in. minimum diameter, with unsealed joints. The top of tile should be 12 in. below the frost line and a minimum distance of 12 in. below unstable or moving material. Tile should be laid to grade, and with all the fall obtainable. The centre line of tile should be parallel to and from 4½ to 7 ft. from the centre of track.

Tile should be placed directly on the bottom of the trench. After it is laid to line and grade, and before backfilling, the tile should be covered with straw, grass, or some such material to prevent loose particles from entering the joints. Trenches should be backfilled with cinders, coarse material being placed directly around and over the tile. Where the sides of the trench show signs of distortion from passing loads, a sufficient quantity of riprap or coarse stone should be mixed with the cinders to brace the walls.

Pockets under track should be tapped with cinder-filled lateral trenches, and connected with the tile-drain trench but without connection with the tile-drain except through the unsealed joints. Remove all surface water from cuts by intercepting and side-ditches; otherwise the tile-drain may be overtaxed and eventually fail entirely.

After drains have been constructed, it is essential to maintain free outlets to prevent water backing into the tile. The ends of drains should be surrounded and supported by concrete or dry masonry to guard against under-wash. To prevent small animals from entering tile, the outlet should be protected by rods or grating. Failures of drains come from the following causes: Insufficient depth below moving material, shifting of grade or alignment causing joints to open, insufficient grade to provide proper flow, placing drain in impervious material without providing adequate means for tapping saturated material with lateral drains or cross-trenches, distortion of walls of trenches.

Generated on 2024-09-30 01:23 GMT / https://hdl.handle.net/2027/uiug.30112007838433
Public Domain, Google-digitized / http://www.hathitrust.org/access_use#pd-google
Digitized by Google
Original from UNIVERSITY OF ILLINOIS AT URBANA-CHAMPAIGN

Prevention of Oil-Derrick Failures in Wind Storms by Improved Method of Guying

By F. B. TOUGH*

On January 17, 1916, and again on the 27th of the same month, the Sunset-Midway, McKittrick, and Coalinga oil-fields were visited by severe wind-storms from the South-west. Of a total of 2000 in the Sunset-Midway field, 940 rigs or 47% were blown down, and many others badly strained. I had occasion to inspect the wrecked derricks of a company that had lost 38 out of 150 or 25.3% of its derricks.

Let us consider the cost of replacing the derrick and the loss of production occasioned by shutting down the wells. It was quite common and was also good practice to replace the 106-ft. derricks used for the original drilling of the wells with an 82-ft. derrick. These were strong, double-braced and suitable for re-drilling or deepening jobs using cable tools. All usable material such as footings, sills, flooring, etc., was, of course, used in reconstruction, but the derricks proper were splintered so as to be practically useless. It cost the company already mentioned $690 for each 82-ft. derrick, or about $26,220 in all. This figure does not include cases where the derrick was not destroyed but the derrick-legs were sprung or the rig-housing damaged. The former charge could be properly added to the $26,220 mentioned above, since it is directly dependent upon proper guying, but the work of repairing derrick-legs was charged to general repairs to derricks, and would now be difficult to segregate. While many of the derricks blown down in the Sunset-Midway field were above flowing wells which did not cease producing as the pumping wells did, nevertheless when the derrick falls there is grave risk to a flowing well because of the possible breaking of fittings, causing the well to flow without control for a time and then 'sand up.'

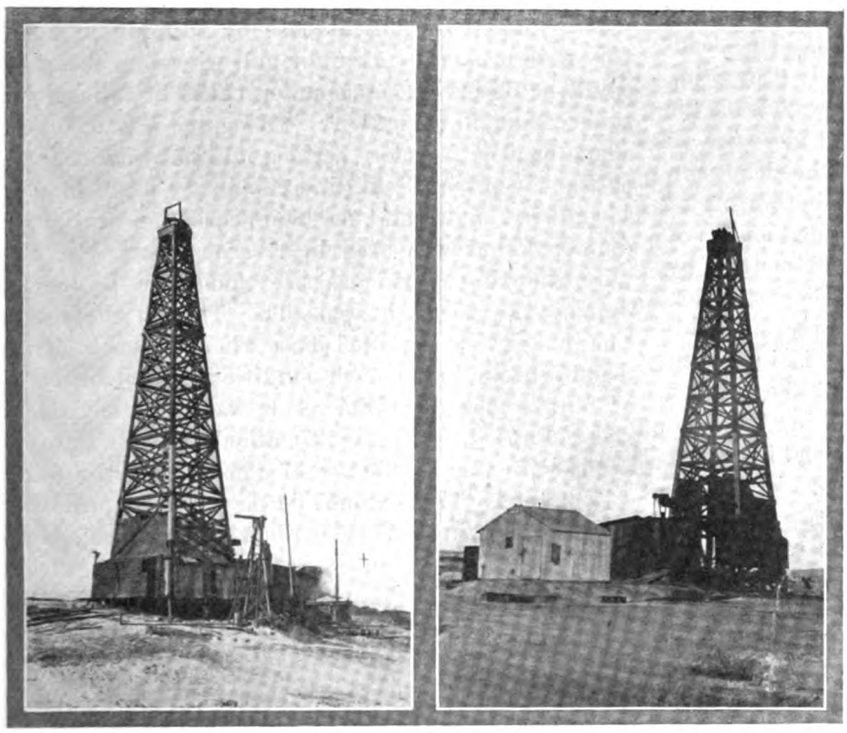

FIG. 1 AND 2. REINFORCEMENT ON DERRICK LEGS.

Let us assume a production of 30 bbl. per day of 24 hours for pumping wells, with oil at $0.30 per bbl. (a conservative figure), and that it was 30 days before all the wells were producing again, with an average of 15 days' loss of production; also, that all 38 wells were pumping. The latter assumption is fair enough, since one flowing well 'sanded up' will occasion a loss in production equal to several times 30 barrels per day, the assumed average production. We therefore have the following:

$38 \times 15 \times 30 = 17{,}100$ bbl., total loss of production

$17{,}100 \times \$0.30 = \$5130$, value of lost production*

$26,220 = cost of reconstruction of derricks

$31,350 = total loss which might have been saved by adequate guying

*No allowance is made for a saving in production cost, since a company cannot reduce its operating costs materially in such a case.

Dividing $31,350 by 150, the total number of rigs exposed to the storm, gives $209 per rig. In other words, an extra expense of $209 per rig for adequate guying would have been justified for these storms alone.

The method of guying now used by this company as described below and illustrated in Fig. 4 and 5 is costing $58 per rig, including all labor and material. If this method of guying is as efficient as it is believed to be, and would have prevented the derrick failures in these storms, the company would have saved $31,350 - (150 × $58) = $22,650. Moreover, this method of guying will outlast the life of the well and continue to do its work indefinitely.

A number of derricks were badly strained, yet did

*U. S. Bureau of Mines, San Francisco.

Generated on 2024-09-30 01:25 GMT / https://hdl.handle.net/2027/uiug.30112007838433
Public Domain, Google-digitized / http://www.hathitrust.org/access_use#pd-google
Digitized by Google
Original from UNIVERSITY OF ILLINOIS AT URBANA-CHAMPAIGN

not fall. Most of these failed a little more than the half-way between the derrick-floor and the point where the lower guy was attached to the derrick-leg. Fig. 1 shows the patches put on the legs of a 106-ft. derrick, and Fig. 2 shows the same thing on an 82-ft. derrick. It will be noticed from these photographs that the portion of the derrick between the floor and the first guy-wires is roughly twice as great as that from the lower guy-wires to the crown-block. This feature is more serious since this lower portion of the derrick presents the greater surface to the wind. Several derricks were seen where the guy-wires held until this lower part of the derrick bent and broke.

The failures studied were all of rigs built and operated by the same company and guyed with two wires to the leg. Wooden dead-men were used, set end to end in the same trench, which was dug approximately 3 ft. deep and 100 ft. from the derrick. The soil is sandy, and during most of the year dry. The guy-wires were all ⅜-in. diam., either seven-wire hard-laid, or six-strand, seven wires on a hemp core. The dead-men were set to pull against planks, usually 2 by 8 in., leaning a few degrees from the vertical away from the rig, and making an acute angle with the guy-wire so that it might be pulled tight by driving the dead-man down along the face of the planks into the bottom of the trench, where it was held by the dirt piled on top of it. Of course when the wire was pulled, particularly by intermittent jerks, as during a storm, the reverse action takes place on the dead-man, tending to force the dead-man out of the ground. This tendency is increased when the stress becomes sufficient to pull the tops of the planks nearer to the derrick. Taking the coefficient of friction between timber and timber as between 0.5 to 0.2,† it would appear that there is no danger of the dead-man working up, and that the 2 by 8-in. boards would 'kick out' at the bottom rather than pull over at the top, on account of the position of the dead-man. Some cases were reported where this had taken place, forcing the dead-man to pull through the solid ground in the line of the guy-wire, but all the cases investigated by me, wherever the evidence was conclusive, showed the planks tipped over toward the derrick, having forced the dead-men up through the filled dirt on top of them.

The investigation of the wrecked derricks showed that the various kinds of failures may be grouped under four heads as follows:

Cause of failure	Number of failures	Total, %
1. Dead-men were pulled out of the ground..	61	67.0
2. Guy-wires broken when kinked or pulled loose by slipping in a knot.....	26	28.6
3. Guy-wires broken by straight pull where no kink or sharp bend could be observed	2	2.2
4. Dead-men so rotten that either the central portion pulled out, or the wire pulled through the dead-man	2	2.2
	91	100.0

†Kent's 'Mechanical Engineer's Pocket Book,' p. 1221.

Discussion of Table of Failures. In the 38 rig failures observed, 94 guy-wires had failed. Of this number three cases were not determinable, so that only the 91 determinable cases are tabulated.

Cause of Failure No. 1. Dead-man pulled out. The depth below the ground surface at which the various dead-men had been buried was determined either by digging, or if the dead-man had been pulled out, by measuring the upright planks mentioned above from the surface line to the line where the plank had been protected by the dead-man. In cases where there was any doubt, several of the planks were placed side by side and an average depth computed. The average thickness of cover amounted to 22 in. for the 27 cases determined. The surprisingly small amount of cover was probably caused by a gradual 'working up' of the dead-men, as much as by shallowness of cover in the first place.

Causes of Failure No. 2 and No. 3. Guy-wire broken where kinked or pulled loose by slipping in a knot. Guy-wire broken by straight pull where no sharp bend could be observed. A common cause of failure was a square knot in a guy-wire. Of course a knot or other sharp bend is far more serious in a hard-laid line such as the seven-wire, ⅜-in. line commonly used, than in a seven-wire, six-strand on hemp-core line of the same diameter that was used in several cases. For either wire, knotting is bad practice, and after the lesson of January 27, seems inexcusable. Though the soft-laid line in a few cases pulled loose where it was knotted, it usually broke under such conditions. Whichever kind of failure took place the result was the same, the derrick collapsed. A frequent method used for tightening a guy-wire was by the use of a couple of 2 by 6-in. by 4-ft. planks. These would be placed on opposite sides of the wire with two 20D spikes driven through them near one end and about 6 in. apart, with the wire fastened between the spikes. The other end of the 'tightener' was then swung by brute force and awkwardness through 180° and was fastened to the guy-wire below by a third spike. The guy-wire was then bent into a flat 'S' around the two 20D spikes. No one can deny that this system tightened the wire, but in so doing, it left but a small portion of the original tensile strength.

If it appears that an undue amount of space is here devoted to a trifling matter like a kink in a guy-wire, study the table of failures and note that of the 28 guy-wires that broke, 26 of them, or 93%, broke in one kind of a short bend or another. Moreover, the two wires that broke by a straight pull and thus probably developed their full strength before failing, were in each case attached to a derrick-leg where the other guy to the same leg broke in a sharp bend, thus throwing the entire load on one wire. While there is no actual proof as to which of the wires broke first, it is reasonable to assume that it was the weakened one that failed, and that this was the indirect, if not the direct, cause of the failure of the second wire. Thus 93% of the wires that broke failed because of gross mistreatment, and, in all prob-

Generated on 2024-09-30 01:23 GMT / https://hdl.handle.net/2027/uiug.30112007838433
Public Domain, Google-digitized / http://www.hathitrust.org/access_use#pd-google
Digitized by Google
Original from UNIVERSITY OF ILLINOIS AT URBANA-CHAMPAIGN

ability, this was the indirect cause of the remaining 7% of the failures.

Guy-wires have frequently become kinked in a manner that at first sight was not objectionable: for example, the guy-wires at the south-west corner of Kern Trading & Oil Co. well No. 18, Section 33, Township

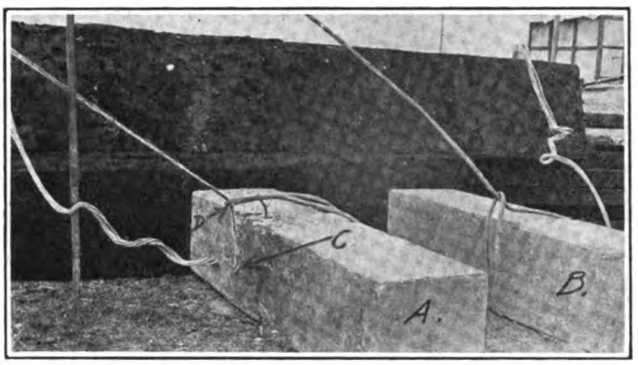

FIG. 3. EXAMPLE OF POOR METHOD OF GUYING.

32 South, Range 24 East. In this case one guy-wire was broken by a straight pull at a point a few feet above the ground. The seven wires were all 'bottle-necked' at the point of failure, and there was no indication that there had been a sharp bend at this point (see *B*, Fig. 3). The other guy-wire was broken off below the ground surface. To determine the cause of the sub-surface failure, the dead-men were dug up and photographed as shown in Fig. 3. The strand of soft rope passing through the loop of wire and attached to the broken end of it on dead-man *A* of this figure shows the course the guy-wire took when in place. Of course, on account of the spring of the hard-laid wire-line, the broken end at *C* does not come up to the loop at *D*, its original position. The sharp bend thrown in the guy-

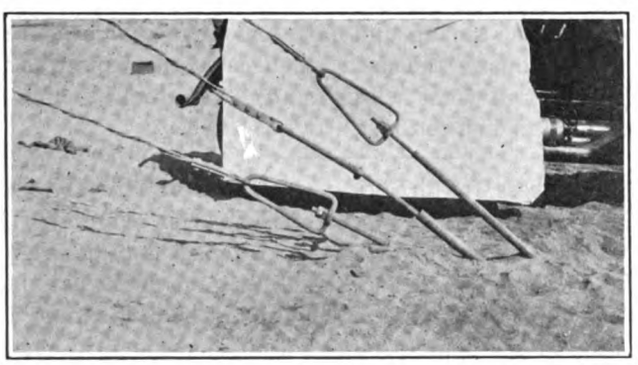

FIG. 4. IMPROVED METHOD OF GUYING.

wire at the point *D* where it pulled against a loop of the wire itself, caused the failure. On the other hand, where the wire passed first around the dead-man (see *B*, Fig. 3) so as to pull against the 8 by 8-in. timber, the hitch held until the wire failed at another point, after developing, in all probability, its full tensile strength.

The foregoing illustration is applicable to attaching the wire to the derrick-leg as well as to the dead-man. Even the better of the two hitches here photographed is far from desirable. The case is used here merely to illustrate a 'rough and ready' practice that is decidedly unsafe.

What, now, is the conclusion as to the size of the line? Is a $\frac{3}{8}$-in. line large enough for the work? If anything breaks in the oil-fields, the common practice is to say, "H—ll, the d—n thing wasn't big enough in the first place," and then to make the aforesaid thing bigger in all future operations. However, from actual observations, although contrary to common practice, we are forced to conclude that the $\frac{3}{8}$-in. guy-wire, either hard or soft-laid, is strong enough if it is used properly.

Cause of Failure No. 4. Dead-men so rotten that either the central portion pulled out with the wire, or the wire pulled through the dead-men. Though there were but two cases actually found where the rotten condition of the dead-men caused the failure of the guying system, and these dead-men had been in about five years, many of the dead-men that pulled out had rotted from $\frac{1}{2}$ to 1 in. deep and were unsound.

Reconstruction Methods. It remains, now, to de-

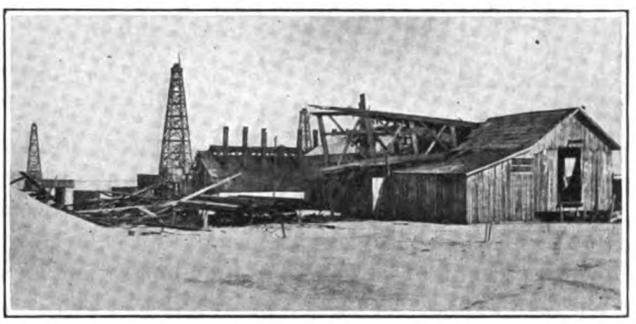

FIG. 6. DERRICK NEAR MARICOPA THAT WAS CARRIED FROM BASE AT LEFT OF PICTURE.

scribe the improvements made in methods of guying. A few companies have merely increased the number of guy-wires with the same system of wooden dead-men set in the same way, and with no provision for tightening the guy, other than some form of 'guy tightener' mentioned above, or by re-setting the dead-man. Also, in some cases, the number of square knots seems to have increased in direct proportion to the increase in the number of wires. On the other hand, many companies have improved their construction methods greatly by the use of various ingenious devices with the following general features:

1. Substantial dead-men that will neither pull out nor decay during the life of the well.
2. A rod connecting the dead-man to the guy-wire so that the latter will not be exposed to rust under the ground surface.
3. Some method for tightening the guy-wires that will not kink them, so that the guy-wires may be kept taut at all times. A slack guy-wire that will allow a derrick to sway is almost as bad as no wires at all.
4. Absence of square knots or sharp bends anywhere in the wire.
5. Three guy-wires to each derrick-leg.

Generated on 2024-09-30 01:29 GMT / https://hdl.handle.net/2027/uiug.30112007838433
Public Domain, Google-digitized / http://www.hathitrust.org/access_use#pd-google
Digitized by Google
Original from UNIVERSITY OF ILLINOIS AT URBANA-CHAMPAIGN

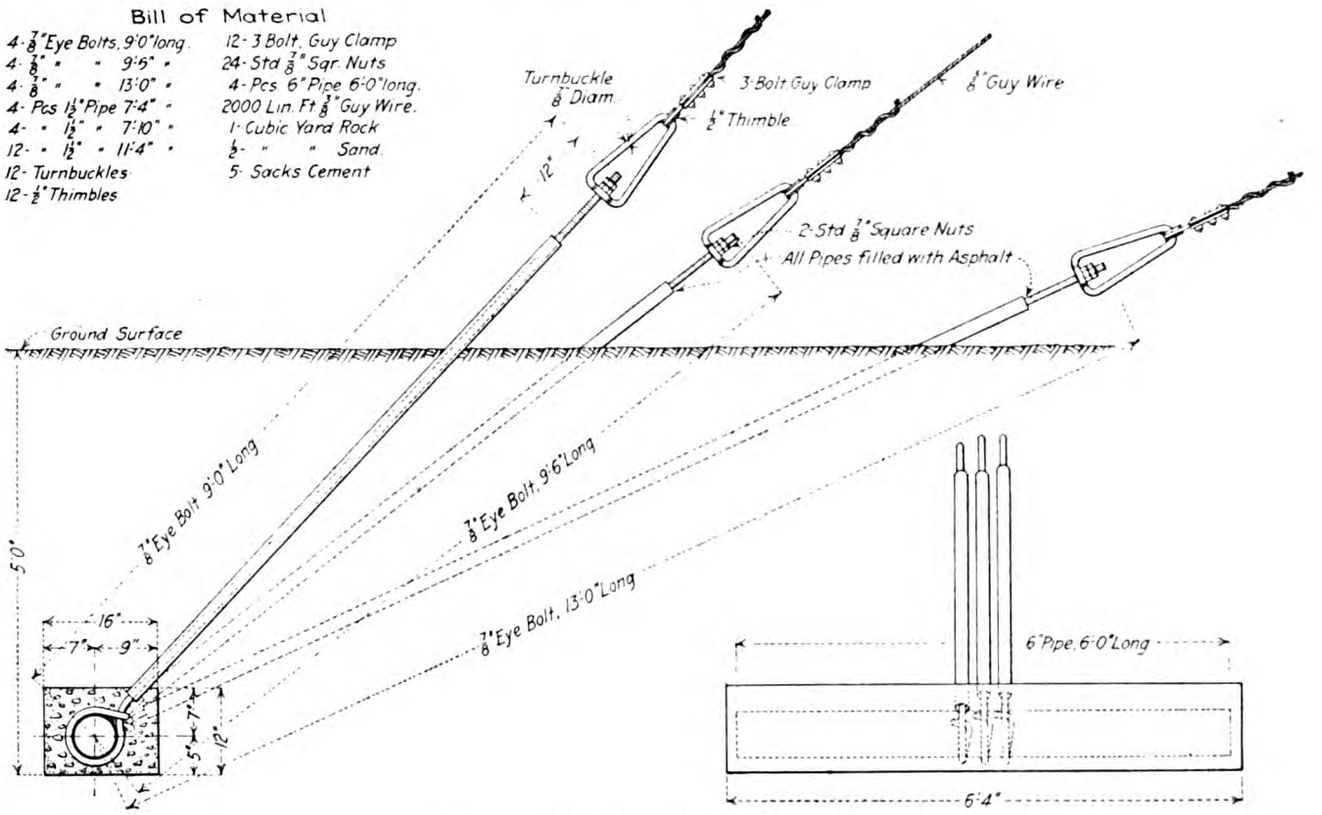

FIG. 5. IMPROVED METHOD OF GUYING.

No one of the various systems can be properly termed the best, since such devices are usually built largely, if not entirely, out of scrap from other operations, such as old drill-pipe or casing for the dead-men, and worn-out sucker-rods to connect the dead-men with the guy-wires. Also the shop facilities are different for different companies. Therefore, what might be the cheapest system for one company might not be the cheapest for another.

A system of guying used with success by the Kern Trading & Oil Co. is shown in Fig. 4 and 5. The dead-men are set 100 ft. from the rig wherever possible depending upon the slope of the ground and other conditions. The pieces of 1½-in. pipe, through which the eye-bolts pass to the surface, are used to prevent rusting of the eye-bolts. They are filled with asphaltum after the rig is guyed. The only machine work necessary is threading the ⅞-in. rods and boring the hole in the bottom of the stirrup.

In attaching the guy-wire to the derrick-leg, the same care should be used to eliminate sharp bends and kinks as at the dead-man. Also inspection is likely to be less efficient when the derrick has to be climbed than otherwise. Since even a three-bolt clamp may work loose due to vibration, it is unsafe to rely on such a clamp entirely. A good method is to pass the wire at least three times around the derrick-leg and to place a three-bolt clamp so it will be about three feet from the derrick-leg when the guy is taut. The free end of the wire should then be fastened below the clamp by a lineman's 'make-up.' This 'make-up' consists of wrapping the free end to the line itself with one or more of the galvanized wires composing the line. Such a 'make-up,' if properly done, should carry the load even without any clamp.

No system of safety devices ever designed can be trusted without adequate inspection, and guying a derrick is no exception to this rule. Besides cautioning the men actually working on a rig to keep the guy-wires taut at all times, it is advisable to have a competent man inspect all the guy-wires on the property twice a year, in the spring and fall, and have him prepare a report showing the data when each guy-wire was inspected, and what work, if any, was done upon it at the time of inspection.

A process for breaking steel bars of any cross-section without waste of metal has been originated by P. V. L. Bellanger. At a point where it is to be broken, the bar is submitted to the slight and quick action of a blowpipe, the flame of which may be oxidizing. The action of the flame produces a physico-chemical change modifying the properties, so that the metal becomes brittle at that point in a small zone. The blowpipe flame should have the shape of a lance head and be applied normal to the length of the bar so that only the point acts on the metal. It is claimed that the molecules of the metal lose their elasticity. The temperature to which the metal is subjected is about 700° C. The bar is placed on two supports, and a hard cutter is applied by pressure or blow opposite to the affected part of the bar, producing a clean break and a flat section without tearing or wasting the metal.—*Mechanical World.*

Generated on 2024-09-30 01:29 GMT / https://hdl.handle.net/2027/uiug.30112007838433
Public Domain, Google-digitized / http://www.hathitrust.org/access_use#pd-google
Digitized by Google
Original from UNIVERSITY OF ILLINOIS AT URBANA-CHAMPAIGN

Cost of Construction of Beckwith Pass Tunnel on the Western Pacific Railway

By H. DEVEREUX*

The Western Pacific railroad crosses the summit of the Sierra Nevada mountains at Beckwith pass. At the pass there is a 6000-ft. single-track tunnel which was constructed between 1906 and 1909. The roof of the tunnel is 24.08 ft. above profile grade, or the top of the foot-block. The top of the wall-plate is 16.54 ft. above grade. The width between plumb-posts is 17 ft. The quantities per linear foot of tunnel are as follows:

EXCAVATION, CU. YD.

	Heading	Bench
Neat section	3.25	10.39
Enlarged section, side-lagged	4.905	12.351
Enlarged section, lagged	....	12.04
Enlarged section, increase lagged	....	1.961
Packing between lagging and 3-in. line	0.267	0.306

TIMBER, FT. B.M.

	Heading	Bench
Solid sets	327.4	408.0
2-ft. centres	285.0	210.4
3-ft. centres	234.6	141.6
4-ft. centres	209.4	107.2

For full lagging, add 124 ft. B.M. per linear foot of bench.

IRON, LB.

	1-bolt	2-bolt	Large washers
Solid sets	10.786	11.571	12.000
2-ft. centres	5.687	6.374	6.750
3-ft. centres	3.944	4.355	4.881
4-ft. centres	3.056	3.607	3.906

Large washers were used after November 1, 1907.

The following scale of wages was in force. As a result of the business depression, the force and in many cases, the wage-rates were reduced on November 25, 1907. Wages are per day unless otherwise noted. Men paid by the month received their board also.

	Before Nov. 25, 1907	After Nov. 25, 1907
Foreman	$4.50	$4.50
Machine-men	4.00	3.50
Machine-helpers	3.50	3.00
Shovelers	3.00	2.50
Teamsters	3.00	2.50
Cornermen	3.50	2.75
Nippers	3.00	2.50
Carpenters	4.00	3.50
Carpenters' helpers	3.00	2.50
Pump-men	3.00	3.00
Steam-shovel engineer	$150 per month	$150 per month
Steam-shovel cranesmen	100 per month	100 per month
Dinkey skinners	75 per month	75 per month
Brakemen	50 per month	$2.50
Pitmen	$3.50	2.75
Dumpmen	$2.50	$2.25
Timbermen	3.00	2.50
Outside laborers	2.50	2.00
Two-horse teamsters	2.75	2.50
Blacksmiths	$100 per month	3.50
Blacksmiths' helpers	$2.75	2.50
Electrician	$75 per month	$75 per month
Compressor engineer (day)	90 per month	90 per month
Compressor engineer (night)	75 per month	75 per month
Master mechanic	125 per month	110 per month
General foreman	150 per month	150 per month
Car repairer	75 per month	75 per month

The following force was employed during December 1907 when both headings were closed.

OUTSIDE OF TUNNEL

	East end		West end	
	Day	Night	Day	Night
Compressor engineer	1	1	1	1
Compressor fireman	1	1	1	1
Dinkey skinner	1	1	1	1
Brakemen	1	1	1	1
Dumpmen	2	2	3	..
Blacksmiths	2	..	1	..
Blacksmiths' helpers	2	..	1	..
Carpenters	1	..	1	..
Electrician	1	..	..	1
Car repairer	.	..	2	..
General foreman	1	..	1	..
Total	13	6	13	5

IN THE TUNNEL

	East end		West end	
	Day	Night	Day	Night
Foreman	1	1	1	1
Drillers	4	3	3	3
Chuckmen	4	3	3	3
Nipper	1	1	1	1
Shovelers	8	8	16	16
Cornermen	.	..	4	4
Pitmen	4	4	..	..
Teamsters	2	2	1	1
Timbermen	6	..	6	..
'Jumbo' engineer	.	..	1	1
Shovel crew	2	2	..	..
Total	32	24	36	30

When the headings were being driven an additional force of 21 men per shift was required inside the tunnel, or 84 men in all. On the outside, 7 additional men were required on each shift on the west end, and 3 additional men on each shift on the east end, or 40 in all. On the west end, a traveling platform called a 'jumbo' was used to load the material, and on the east end, a model No. 20 Marion shovel operated by air.

*Consulting engineer, 1990 Fell street, San Francisco.

Generated on 2024-09-30 01:24 GMT / https://hdl.handle.net/2027/uiug.30112007838433
Public Domain, Google-digitized / http://www.hathitrust.org/access_use#pd-google
Digitized by Google
Original from UNIVERSITY OF ILLINOIS AT URBANA-CHAMPAIGN

Fig. 1 gives a progress summary of work on the east-end heading during 1907. Following were some of the causes of delays: Out of oil, 41 days; out of material,

Month	Excavation Progress.	Timber Progress	Days Worked	Days Progress was made	Days Delayed	Average force	Foreman	Drillers	Chuckmen.	Nippers.	Shovelers	Car Pushers	Teamsters.	Pumpmen.	Timber men	Excavation Pay-roll.	Timber Pay-roll
January.	114	112	28	26	5	43	2	9	8	2	1	6			5	3610	440
February.	130	60	27	22	6	39	2	9	9	2	9	8			3	3580	275
March.	85	10	18	15	16	44	2	8	7	2	16	9			1	2690	60
April.	73		27	12	18	32	2	7	7	2	9	5				2930	
May	89	38	26	13	18	38	2	9	9	2	10	6			7	3350	620
June.	111	67	26	20	10	42	2	8	9	2	12	9			7	3710	620
July	104	42	28	18	13	38	2	8	8	2	10	8			4	3610	380
August	102	51	31	26	5	41	2	8	8	2	10	7			4	4320	420
September.	109	14	30	20	10	34	2	8	7	4	7	5			1	2510	100
October.	93		31	20	11	41	2	8	8	4	5		4			4310	
November.	17		8	5	3	44	2	8	8	4	18		4			1180	
Nov. Timbering.		64	18	10	8	14	1	2	2						9		740
December	No work.																
Total	1027	458	298	207	133											35800	3665

FIG. 1. PROGRESS SUMMARY FOR EAST-END HEADING.

14 days; bad ventilation, 5 days; changing track, 13 days. Before November 25, the average rate of wages was $3.40 per day; after November 25, it was $2.95.

Fig. 2 gives a similar progress chart for the east-end bench. Some of the causes for delays were as follows:

Month	Excavation Progress	Timber Progress.	Days Worked	Days Progress was made.	Days Delayed	Average force	Foreman.	Drillers	Chuckmen.	Nippers	Shovelers.	Pitmen.	Teamsters.	Pumpmen	Shovel crew.	Excavation Pay-roll.	Timber Pay-roll.
January	41	99	28	13	18	23	2	4	4		8	1	2		2	2210	100
February	61	23	27	16	12	24	2	4	4		9	1	2		2	2230	100
March	45	60	21	11	20	37	2	5	5	2	13	4	2		4	2500	400
April.	53		28	7	23	29	2	5	4	1	6	1	2		4	2910	
May	77		23	14	16	32	2	7	7	2	4	3	3		4	2690	
June.	96		28	21	9	29	2	7	6		3	4	3		3	2810	
July	74	36	27	18	13	30	2	7	7	1	4	3	4		2	2620	300
August	91	62	30	25	6	33	2	6	5	1	9	4	3		3	3010	400
September	69	105	29	20	10	32	2	7	4	2	5	7	3		2	2960	350
October.	103	58	31	25	6	41	2	7	7	2	9	8	3		3	3290	400
November.	141	66	29	28	2	58	2	9	10	2	14	8	4		3	5000	400
December.	116	115	31	26	5	45	2	5	6	2	15	8	4		3	4610	400
Total.	967	624	332	224	141											36840	2850

FIG. 2. PROGRESS SUMMARY FOR EAST-END BENCH.

out of oil, 41 days; out of material, 10 days; changing track, 6 days; bad track, 24 days; steam-shovel troubles, 40 days. Average wages before November 25, $3.60; after November 25, $3.15.

Fig. 3 gives the progress on the west-end heading. Causes of delays include: out of oil, 45 days; out of ma-

Month.	Excavation Progress	Timber Progress.	Days Worked	Days Progress was made	Days Delayed	Average Force	Foreman.	Drillers.	Chuckmen.	Nippers.	Shovelers	Car Pushers.	Teamsters.	Pumpmen.	Timber-men	Excavation Pay-roll.	Timber Pay-roll.
January	176	178	27	26	5	48	2	9	9	4	17	7			8	4260	712
February	174	132	28	26	2	53	2	10	10	4	17	8		2	7	4860	650
March	112	30	16	15	16	49	2	9	9	4	15	8		2	6	2590	315
April.	152		25	23	7	45	2	7	8	3	14	9		2		3720	
May.	165	48	27	27	4	50	2	8	8	3	15	12		2	4	4450	355
June	147	71	30	27	3	45	2	8	8	2	11	12		2	5	4460	495
July	115	36	30	24	7	38	2	8	7	2	8	10		1	5	3760	495
August	23	23	11	5	26	30	2	7	6	1	10		4		3	1090	110
September	85	36	16	14	16	30	2	6	6	2	11		3		3	1580	160
October.	112	79	28	21	10	35	2	8	7	2	12		4		5	3240	460
November.	13	182	12	6	7	28	2	6	7	2	7		4		23	1100	882
December.		166				8	1	1	1						5		705
Moving Fall; Aug.		40	20			25	2	5	5	3	7		4		4	1650	265
" " ; Sept.		37	14			23	2	4	4	2	8		3		3	1060	140
Total.	1274	1058	284	213	103											37,820	5482

FIG. 3. PROGRESS SUMMARY FOR WEST-END HEADING.

terial, 10 days; removing falls, 38 days; track work, 10 days. Average wages before November 25, $3.30; after November 25, $2.80.

Fig. 4 gives the progress on the west-end bench. Causes of delays included: out of oil, 38 days; out of material, 4 days; bad track, 7 days; track work, 9 days. Average wages before November 25, $3.30; after November 25, $2.80.

Month	Excavation Progress.	Timber Progress.	Days Worked	Days Progress was made.	Days Delayed	Average force.	Foreman.	Drillers.	Chuckmen.	Nippers.	Shovelers.	Carmen.	Jumbo Engineer	Teamsters.	Donkey crew.	Excavation Pay-roll.	Timber Pay-roll.
March	10	10	7	5	16	29	2	4	4		17				2	670	
April	49	49	25	22	8	33	2	4	4	2	17	3	2		2	2720	250
May	74	74	27	23	8	36	2	5	5	2	17	5	2		3	3200	440
June	107	107	28	28	2	36	2	5	6	2	16	8	2		3	3320	740
July.	127	125	30	28	3	36	2	6	6	2	15	6	2		3	3560	590
August	120	118	31	25	6	37	2	6	6	2	16	8	2		3	3780	820
September	170	174	30	30		51	2	7	8	2	27	8	2		3	5040	790
October	170	170	31	30	1	46	2	5	6	2	26	8	2		3	4700	820
November.	103	99	27	18	12	49	2	6	6	2	28	8	2		3	4260	700
December.	166	166	31	29	2	42	2	6	6	2	23	8	2	2		3650	690
Total.	1096	1092	267	238	58											34900	5840

FIG. 4. PROGRESS SUMMARY FOR WEST-END BENCH.

The rock at the west end was a decomposed granite. At the east end the granite was hard, 'blocky,' and 'seamy.' The cost per cubic yard to the contractor was as follows:

	Heading East	Heading West	Bench East	Bench West
Drilling and blasting	$3.65	$2.93	$2.10	$1.20
Shoveling and loading	1.95	2.14	1.15	1.50
Powder	0.80	0.35	0.20	0.12
Outside men	0.63	0.55	0.35	0.30
Plant	0.49	0.33	0.32	0.19
Fuel oil	0.69	0.59	0.43	0.29
Superintendence	0.20	0.17	0.11	0.10
Total	$8.41	$7.06	$4.66	$3.70
Labor timbering	0.58	0.73	0.25	0.45

Average, $5.40 per cubic yard.

Powder cost $0.15 per lb. and fuel-oil, $1 per barrel.

In this connection the following data regarding the cost of other long tunnels is of interest. A 2091-ft. single-track tunnel for the Southern Pacific Co. in the Sierras, with a section of 17.25 cu. yd. per lin.-ft. cost $3.92 per cu. yd. A 1136-ft. tunnel in the same region with the same cross-section cost $2.92 per cu. yd. On the bay-shore cut-off of the Southern Pacific Co., double-track throughout, the 'Potrero' tunnel, section 32.17 cu. yd. per lin. ft. cost $2.87 per cu. yd. The 'Orphan Asylum' tunnel, with the same section, cost $3.75 per cubic yard.

Flow of water in metal flumes has been the subject of some recent experiments by the U. S. Reclamation Service. The tests were made on flumes on the Uncompahgre and North Platte projects with both countersunk and protruding joints. The length of flume varied between 140 and 600 ft. and the discharge between 14.5 and 150 second-feet. The value of n in Kutter's formula for the flumes with countersunk joints and a smooth interior ranged between 0.0097 and 0.0139 with an average of 0.01145. Only one test gave a value greater than 0.0131. A value of 0.013 is recommended in design. For the flumes with protruding joints the value of n ranged between 0.0175 and 0.0202 with an average of 0.0185. Some earlier experiments gave a value of 0.0207. A value of 0.02 is recommended in design.

Generated on 2024-09-30 01:25 GMT / https://hdl.handle.net/2027/uiug.30112007838433
Public Domain, Google-digitized / http://www.hathitrust.org/access_use#pd-google
Digitized by Google
Original from UNIVERSITY OF ILLINOIS AT URBANA-CHAMPAIGN

Cost of Acquisition of Land for Public Utilities

The following summary of data is taken from the final report on valuation prepared by a special committee of the American Society of Civil Engineers, composed of Frederic P. Stearns, chairman, Charles S. Churchill, William G. Raymond, Henry E. Riggs, Jonathan P. Snow, William J. Wilgus, and Leonard Metcalf.

The Interstate Commerce Commission in its classification of Investment in Road and Equipment, effective July 1, 1914, includes as items of expense relating to land the following:

Abstracts.

Appraisals.

Arbitrators in condemnation cases.

Commissions paid to others.

Condemnation expenses, including court costs and special counsel fees.

Damages to property of others.

Deferred payments for right-of-way.

Ditches for waterways when part of consideration.

Judgments and decreed costs to clear or defend titles.

Notarial fees.

Plats.

Premiums on condemnation bonds.

Recording deeds.

Payments for relinquishments of cattle passes and other rights.

Removal and re-location of buildings and other structures not purchased.

Rent of land when part of consideration for purchase.

Right-of-way agents' compensation when engaged solely in acquiring right of way.

Taxes accrued and assumed at the time of purchase.

Every one of these items is a necessary expense, not all incurred in connection with every parcel, but every parcel involving some of them, and all are chargeable to capital account as a legitimate cost.

The amount is considerable, in some cases a large proportion of the purchase price of the parcel of land, but it is difficult to compute, for when it is reduced to a per acre basis or a total cost basis it is variable. The cost of condemning, or acquiring by purchase, a small fragment of land one-tenth of an acre in area may be as great as the cost of similarly acquiring a farm of many acres.

Examples of actual cost of acquisition of lands are of value as showing the extreme variations in proportion of total cost and per acre rates of such costs.

Statistics presented by Thomas W. Hulme, in the argument recently held before the Interstate Commerce Commission, show purchases by twenty different corporations for forty-five different pieces of construction. The cost of acquisition varies from 0.86 to 38.4%.

Total consideration, all lines, $8,389,730.

Costs of acquisition, $452,656, average 5.4%.

Land purchases of the Buffalo, Rochester & Pittsburgh Railway.

Year ended June 30	Number of parcels	Total acres	Consideration for land	Total costs of acquisition	Cost of acquisition: % of consideration	Cost of acquisition: Per acre	Cost of acquisition: Per parcel
1910..	35	165.789	$20,086	$5,828	2.9	$35.30	$166
1911..	16	58.694	16,604	1,521	9.1	26.00	95
1912..	29	60.732	33,506	1,718	5.1	26.50	59
1913..	63	109.705	73,469	3,486	4.7	31.70	55
1914..	24	28.730	50,292	3,677	7.3	126.40	153
	167	423.650	$193,957	$16,230	8.38	$38.31	$97

These variations in costs of acquisition from less than 5 to 9%, and in cost per acre from $26 to $126, in cost per parcel from $55 to $166, are such as to show the necessity of careful investigation of varying local conditions before fixing the estimated amounts.

Land purchases of the Chicago & Northwestern Railroad, on one of its new lines, show rates as follows: 3,620.41 acres; land consideration, $594,169; expense, $72,685; being 7.62%, or $20 per acre.

Water-works properties afford an illustration of a class of properties carrying a high cost of acquisition. This is shown by the land costs of the New York City Catskill water-supply.* The whole matter may be briefly summarized as follows:

Amount of awards for land, including payments for land purchased	$10,669,946	
Awards for indirect damages	135,007	
Estimated awards for land and damages during 1915, proportionate part of $500,000	323,000	
Total payments for land and damages		$11,127,953
Expenses of acquiring land, not including interest, as per auditor's report	$4,188,795	
Expenses in connection with damages awards	159,794	
Expenses in connection with estimated awards during 1915, proportionate part of $500,000	127,000	
Total expenses		$4,475,589
Total cost of land, with expenses of acquiring it, but not including interest		$15,603,542
Interest on awards allowed by commissioners and included in the auditor's report as part of the cost of land	$1,648,802	
Estimated interest on awards allowed for 1915, proportionate part of $500,000	50,000	
Total interest on awards		$1,698,802

*Information furnished and arranged by Allen Hazen, from records and published reports and with the aid of engineers of the Department.

Generated on 2024-09-30 01:25 GMT / https://hdl.handle.net/2027/uiug.30112007838433
Public Domain, Google-digitized / http://www.hathitrust.org/access_use#pd-google
Digitized by Google
Original from UNIVERSITY OF ILLINOIS AT URBANA-CHAMPAIGN

Total actual payments for property to January 1, 1916, including an estimate of $500,000 for payments in 1915		$17,302,344
Cost of carrying, after acquiring, up to the time when the system is to be put in service, taken as January 1, 1916:		
Taxes paid	$216,534	
Taxes estimated for 1915	25,000	
Interest on amounts paid to January 1, 1916, at 4.15%	3,746,652	
Total carrying charges		$3,988,186
Total cost of land and damages, with carrying charges up to date of first use of property, January 1, 1916		$21,300,530

Calculating the proportion corresponding to these figures, it appears that the expense of condemnation amounted to 40.1% of the awards and costs; that the interest on the awards allowed by the commissioners and included by the auditor as part of the cost of the land amounted to 10.85% of the awards and expenses; that the taxes paid by the city amounted to 1.5% of the cost of the preceding items; and that the interest on the various payments, from the dates of the payments until the property is put into use on January 1, 1916, will amount to 21.3%. As a result of all these charges, the cost of the land to the city, with carrying charges to the date of first use, is 91.3% greater than the purchase prices and awards. In other words, the overhead charge on the land is 91.3%.

The expenses of acquiring land, as stated by the auditor, in the sum of $4,188,795, are given below. This particular case represents the acquisition of land by a city under a law which proved in its execution to be unusually burdensome. It is of value for illustrative purposes, on account of the prominent character of the work and the detail as to costs.

The total costs were 39.26% of the purchase price, and were:

		%
Advertising	$ 433,946.46	4.16
Commissioners' fees	1,062,498.72	9.96
Expenses of commissioners	79,898.40	0.75
Stenographers and clerks	62,606.70	0.59
Special counsel fees	358,679.20	3.36
Special counsel expenses	27,493.06	0.26
Obtaining orders	8,375.00	0.08
Closing title	1,370.00	0.01
Counsel fees on appeal	3,275.00	0.03
Costs on appeal	4,499.97	0.04
Searching titles	211,138.64	1.98
Preparing abstracts	125,312.50	1.17
Appraisers' fees	482,512.53	4.52
Appraisers' expenses	5,792.72	0.06
Rent of New York office	26,269.40	0.25
Stenographers' services and printing testimony	265,684.24	2.49
Counsel fees of parcel owners	384,405.99	3.60
Expenses and disbursement of parcel owners	261,275.36	2.45
Engineering salaries and expenses	373,760.65	3.50
	$4,188,794.54	39.26

Another detailed statement regarding the acquisition of land by a State commission, under a law which was not burdensome, is afforded by the experience on the Metropolitan Water-Works of Massachusetts. In this case the principal acquisition of land was for the Wachusett reservoir, the construction of which was not started until several years after other portions of the work were begun. The policy was followed, therefore, of acquiring this land as it could be obtained by negotiation, without resorting to condemnation except in special cases. Much of the land was acquired in this way, considerably in advance of the needs of the work, at a much lower price than would have been possible by condemnation, but with an increase in the charges to taxes and interest during construction. From the accounts of all real estate purchased, from the initiation of the work in 1895 to December 1, 1909, the following summary is obtained:

Total paid directly for real estate, including mill properties and water-rights acquired by negotiation		$3,390,723
Awards for real estate condemned, including interest to the date of payment		170,446
Total direct payments for real estate		$3,561,169
Legal and expert services, including conveyancers, experts, appraisers, and court expenses, in acquiring above real estate, exclusive of counsel fees	$179,944	
Estimated proportion of total administration expenses attributable to real estate	60,000	
Engineering expenses are shown by the accounts to amount to $83,582 for the Wachusett reservoir alone. Assuming that other real estate acquisition would require the same proportion of engineering expenses, the total would be	104,700	
Estimated expenses for counsel in real-estate cases, charged to the general expenses of the State, and, therefore, not included in the water-works accounts	20,000	
Estimated expenses for financing and financial officers, attributable to real estate and charged to the general expenses of the State and, therefore, not included in the water-works accounts	20,000	
Total cost of acquisition		$384,644
Total cost of real estate, exclusive of taxes and interest during construction		$3,945,813
Taxes during construction		68,182
Interest during construction on Wachusett reservoir, real estate alone, on the basis of 5% compounded annually, would have amounted to $957,000, or 31% of the expenditures for this real estate, including incidental expenses, to the time when the reservoir was first operated. It is estimated that the interest during construction on other real estate would have increased this sum to		1,000,000
Total cost of real estate		$5,013,995

It appears that the incidental expenses of acquiring the real estate amounted to 10.8% of the direct payments for it; that the taxes paid during the construction of the works amounted to 1.9% of the direct payments; and that the interest on the various payments, from the dates of the payments until the property was put in use, on a 5% basis, would have amounted to 28.1% of the direct

Generated on 2024-09-30 01:26 GMT / https://hdl.handle.net/2027/uiug.30112007838433
Public Domain, Google-digitized / http://www.hathitrust.org/access_use#pd-google
Digitized by Google
Original from UNIVERSITY OF ILLINOIS AT URBANA-CHAMPAIGN

payments. As a result of these charges, the cost of the real estate, with overhead and carrying charges to the date of the operation of the property, is 40% greater than the direct payments for it.

The incidental expenses of 10.8% previously given may be subdivided as follows:

	Amount	%
Legal and expert expenses, including counsel fees	$199,944	5.62
Administration	60,000	1.68
Engineering	104,700	2.94
Financial expenses	20,000	0.56
Total	$384,644	10.80

The records of the Metropolitan Water Works show the relation between the value of the real estate of the Wachusett reservoir, exclusive of mill property, for general purposes, and the sums which were paid for it.

Before deciding on the project, an estimate of cost of the required real estate was made. To obtain a basis for this estimate, local experts were secured in each town, who went over all the lands, parcel by parcel, appraising the value of land and buildings separately. Their instructions were to value the property liberally, and the results obtained were much above its value as determined by sales which had been made about that time. Some of the experts owned property which would be taken for the reservoir. The assessed valuations in this district are supposed to be close to the full value of the property, but the value fixed by the experts was 1¾ times the assessed value of the property. As a result of the appraisal by the experts, the aggregate valuation obtained was as follows:

Land, 4772 acres	$244,000
Buildings	453,000
Total	$697,000

The cost of acquiring the same property, exclusive of overhead charges, was $1,182,000, equal to $485,000, or 69% in excess of the original liberal appraisal of the value.

It is to be noted that this is a case where the appraised general value of the buildings was nearly twice that of the land. The accounts do not show a separation between the amounts paid for buildings and land, but if these amounts could be obtained, they would show that the sums paid on account of the land, in excess of the appraised value, would be a large part of the $485,000 excess, for the reason that it is difficult to sustain a claim for the value of a building much in excess of its value for general purposes. The 69% previously stated is, therefore, probably much more than the excess cost of the buildings, and much less than the excess cost of the land, over their values for general purposes. It is to be noted, also, that in the acquisition of this property most of the land was taken in whole tracts or parcels, so that there were no severance damages in connection with such portions of the property.

The accounts do not show the sums paid for strips of land taken for aqueducts or pipe-lines in comparison with general land values, but the original estimate of the cost of these strips was obtained by multiplying the general value of the land by six, and adding an allowance for overhead charges. The actual cost corresponded nearly to the estimate.

An illustration which is in marked contrast to the New York Catskill water-supply is that of a railroad line in friendly territory, and is as follows:

LAND PURCHASES

Details of Knife River branch, North Dakota, Northern Pacific Railway

	Mercer county	Dunn county
Valuation of naked land per acre, made by real-estate men and bankers, not by employees	$22.07	$22.13
Total	$15,709.42	$12,065.12
Total number of deeds	86	63
Total acres conveyed	784.97	615.55
Average acres per transfer	9.12	9.77
Total consideration	$24,460	$17,106
Average consideration per acre	$35	$27.80
Total number of condemnations	4	None
Acres condemned	70.83	.....
Award in condemnation cases	$1,966.52	.....
Average per acre, award	$27.70	.....

SUMMARY, BOTH COUNTIES:

Total naked land value	$27,774.54	62.32%
All other elements of value	16,791.89	37.68%
Total purchase price	$44,566.43	100%
Expense of acquisition	$9,258.79	
Proportional expense of acquisition to purchase price	20.77%	

EXPENSE OF ACQUISITION:

		Ave. per deed	Ave. per acre
Services and expenses, right-of-way agents	$6,790.75	$46.19	$4.85
Services and expenses of attorneys	705.69	4.80	0.50
Costs of abstracts and opinions of title	1,227.80	8.35	0.93
Cost of recording deeds	329.55	2.24	0.23
Automobile hire	205.00	1.40	0.15
Total	$9,258.79	$62.98	$6.66

This case affords an illustration of a low cost of acquisition. The line was desired by the people. There was but little contest, as two of the condemnation cases were to acquire land owned by the State of North Dakota, the other two being against land companies. Settlements were made with all individual owners. In spite of these facts, the land cost was $27,774.54, while 'other elements' plus cost of acquiring amounted to $26,050.68, or 93.8% of the bare-land price.

The conclusion to be drawn from a study of all the figures available to the Committee is that cost of acquisition, like the element of damages in the consideration, are variable, that each valuation must stand by itself, and that, in fixing a figure for land reproduction, the appraiser must take into account all special local conditions. It is perfectly clear that no general average proportion which is universally applicable is to be derived from these figures.

Generated on 2024-09-30 01:24 GMT / https://hdl.handle.net/2027/uiug.30112007838433
Public Domain, Google-digitized / http://www.hathitrust.org/access_use#pd-google
Digitized by Google
Original from UNIVERSITY OF ILLINOIS AT URBANA-CHAMPAIGN

The Horse Heaven Irrigation Project

The land in the proposed Horse Heaven irrigation project comprises 511,000 acres lying on a sloping plateau between the Yakima and the Columbia rivers and draining toward the Columbia. The elevation above sea-level ranges from 250 to 2500 ft. The entire area is a treeless, rolling prairie covered in its natural state with either bunch-grass or sage-brush. Part of the land is now under cultivation, wheat being the principal crop. The rainfall is from 8 to 12 in. per year. The climatic and soil conditions are such that, with irrigation, the principal crops common in the Northwest, including fruit, could be raised.

Excluding 110,000 acres along the Columbia river, which will probably be irrigated subsequently by pumping, the land within the district has been classified as follows: 239,000 acres practically level, 95,000 acres rolling, and 30,000 acres rough but irrigable. About 70,000 acres in the district is in claims not yet patented to the entrymen, and there is also 25,000 acres of State land. Under the present laws, these lands can be assessed for district charges, and the charges must be paid before patent is issued. There are about 950 land-owners in the district, some of the holdings being as large as 10,000 acres.

The land-owners have formed an irrigation district and employed O. Laurgaard, consulting engineer of Portland, Oregon, to report upon the project. This article is based upon Mr. Laurgaard's report.

Water is to be obtained from Klickitat river and its principal tributaries, the North and West forks, and Big Muddy creek, also the Cispus river and the Diamond fork of the Klickitat. Complete hydrographic records from the Government gauging station at Glenwood are available from 1910 and fragmentary records for the two years preceding. These records indicate a safe draft of 345,000 acre-feet per year without storage and 214,000 acre-feet additional with storage. The duty of water recommended is 1.67 acre-feet per acre per year, indicating that the supply will be ample for 300,000 acres.

The following complete system is recommended covering 300,000 acres. The main canal is to be 120.45 miles long from the point of diversion to Glade canyon within the limits of the district. There will be three tunnels, 9200 ft., 13,400 ft., and 17,100 ft. long, respectively, 9800 ft. of wood-stave pipe inverted siphon, and 74,800 ft. of wooden flume. The canal will have a 4-in. concrete lining and 1 to 1 slopes. The cost, including engineering and contingencies, for a capacity of 1250 second-feet, is estimated at $9,476,800. For a capacity of 1500 second-feet the estimated cost is $10,825,400.

There will also be two large collecting-canals, the Big Muddy canal diverting the waters of Big Muddy creek into the West Fork canal, and the West Fork canal, diverting the West fork of the Klickitat river. The Big Muddy canal will be 11 miles long, and will have a capacity of 500 second-feet, and the West Fork canal will be 5.61 miles long and have a capacity of 1000 second-feet. The total cost of the two canals is estimated at $731,790.

There will be six main laterals in the distribution system. They will be lined with concrete where seepage is likely to be large. The estimated cost of the main laterals is $1,979,498. The cost of two pumping plants to supply land just above the main lateral is estimated at $551,900.

The construction of the following reservoirs is recommended:

Name of reservoir	Height of dam	Capacity, acre-feet	Estimated cost	Cost per acre-foot
Two Lakes	100	43,150	$1,302,400	$30.19
Fish Lake	142	25,330	592,800	23.80
Caldwell Prairie	212	110,000	2,450,800	22.28
McCreedy Creek	..	40,000	1,600,000	40.00
Tepee Creek	125	25,000	750,000	30.00
Missouri Flat	216	53,800	2,137,300	39.75
Total and average		297,280	$8,833,300	$29.69

The total cost is estimated as follows:

Storage dams	$8,833,300
Big Muddy canal	391,895
West Fork canal	339,895
Main canal	10,825,400
Main laterals	1,979,498
Sub-laterals and structures	1,200,000
Pumping plants No. 1 and 2	551,900
Cispus, Cedar Valley and Little Klickitat diversions	131,550
Purchase of privately-owned water-rights	300,000
Total	$24,553,438

Total per acre for 300,000 acres, $81.84.

This is exclusive of any power development at the different reservoirs. The estimated charge for operation and maintenance is $1.25 to $1.75 per acre per annum. If power is developed and sold this charge can probably be reduced materially.

The report recommends an immediate bond issue of $15,000,000 and the construction of most of the system outlined above except the storage reservoirs. The project could then be operated on a natural-flow basis until enough of the land was brought under cultivation to justify the construction of the storage-reservoirs.

Blowholes in steel castings as thick as $\frac{9}{16}$ in. may be detected by means of radiographs taken with a Coolidge tube, as shown by experiments made at the laboratories of the General Electric Co. of Schenectady. The length of exposure required decreases as the voltage is increased. Experimenting with air wedges between two plates, it was found that an air inclusion of a thickness of 0.021 in. can be detected in $1\frac{1}{4}$ in. of steel. The radiographs also afford a good way of judging the soundness of welds.—*Mechanical World.*

Generated on 2024-09-30 01:27 GMT / https://hdl.handle.net/2027/uiug.30112007838433
Public Domain, Google-digitized / http://www.hathitrust.org/access_use#pd-google
Digitized by Google
Original from UNIVERSITY OF ILLINOIS AT URBANA-CHAMPAIGN

The Prevention of Misfires

By E. F. BROOKS

Blasting, or breaking of rock, constitutes a large item of expense in contract work, and any reduction of this expense is always welcomed. One way of reducing cost would be to lessen the number of 'misfires' or missed holes, as they are commonly called in the mine. Precautions may be taken to reduce them to a minimum. They are sometimes caused through poor judgment in placing the holes, the first hole to be fired breaking to a joint or cleavage-plane, tearing off the collar of some other hole, and with it the fuse, causing a 'miss.' No inflexible rule can be given for placing a round of holes, as this depends entirely on the character and hardness of the ground to be broken. The machine-man must use his judgment, which only becomes ripened through experience. The fuse should always be of the best quality, whether in wet or dry ground. A poor quality of fuse is dear at any price; the best fuse is always the cheapest, as one misfire, due to poor fuse, particularly in hard ground, may result in more damage than the cost of several cases of good fuse. The same applies to detonators, or caps. The best results are obtained by using high-power caps, 5X or 6X. In the case of gelatine powder, it frequently happens that a 3X or 4X cap may still fail to explode the charge, merely setting the dynamite on fire, causing a 'burnt hole,' which is worse than an ordinary 'miss,' owing to the resulting noxious fume, which is more poisonous to inhale than the fume from powder that has exploded properly.

Nothing weaker than 5X or 6X caps should be used. Misfires may be caused by not using proper care in cutting or 'spitting' the fuse, so that the holes will go in proper succession, the hole that should be second or third sometimes being the first to explode, possibly tearing a portion off the collars of the holes that should have preceded it; pulling out or cutting off fuses and resulting in one or more 'missed holes.' If in hard ground, such a result is likely to spoil the whole round, leaving in the face holes of varying depth, called by miners 'old bottoms,' 'old guns,' 'boot-legs,' and so forth, each containing from one to four or more sticks of powder, and constituting a menace to those who have to work later, whether the men of the same shift or others.

Another occasional cause of missed-holes, and one I have never known workmen to take into consideration, is tamping. Many years ago, when black powder was the explosive used, it was necessary to tamp holes, and tamp firmly, using a wooden or copper rod, and a hammer for the purpose. This is unnecessary in the use of nitro-explosives, as even the air itself will offer sufficient resistance to exploding dynamite to constitute good tamping.

It is a common practice with most workmen to use some kind of tamping. Sometimes fine rock, or dirt, is thrown in the hole, and rammed with the loading stick; at other times balls are made of clay or gouge, and firmly rammed, which is even worse than using fine rock, for the reason that the side-spitting of the fire in the fuse will sometimes set fire to the powder, which, while it does not explode, will generate sufficient gas to force the tamping out of the hole, drawing the fuse with it and leaving another 'missed hole' Had there been no tamping used, even if the powder took fire and burned faster than the train of powder in the fuse, it would explode the charge as soon as the fire reached the cap.

I would suggest that in holes pointed downward, a handful or two of fine dirt be thrown into the hole, but not firmly tamped, using this as a safeguard against accidents when firing or 'spitting' the holes, such as the accidental dropping of a lighted candle into the hole, or dropping the lighted end of a fuse into it.

Many times 'reports short,' or 'misfires,' are traceable to carelessness, or to the nervousness, due to inexperience, of the man 'spitting' the round of holes. In his haste to leave, the workman overlooks some fuses, and so fails to spit them. Evidence of this is not infrequently found in the broken rock—a fuse with cap attached—which, upon examination, shows that it never had been lighted.

In blasting under water or in wet ground, it is absolutely necessary to see that the point of union between fuse and cap is waterproof. This may be accomplished with a good pair of crimpers, properly used, without the use of any waterproof substance, such as axle-grease, which is so commonly used for this purpose. However, it is generally safer to employ some kind of waterproof substance. But axle-grease, or anything containing coal-oil, is not recommended, for, if left too long, it will penetrate the fuse, and possibly cause a misfire.

The kind of crimpers used is largely a matter of preference. I prefer those making a groove around the cap. Make a double-crimp, turning the fuse slightly after making the first crimp, and take care to crimp close to the joint between the fuse and cap, but never close to the fulminate in the cap, for if crimped too close to the fulminate the flash from the little powder remaining in the fuse between the crimp and fulminate may not be strong enough to explode it, while if ½ in. or so of fuse is left below the crimp, the force will be sufficient even if tightly crimped. Care should be taken to see that the diameter of the fuse is just slightly smaller than the shell of the cap, for if too tight, the crimper will compress the fuse so tightly that the fire may fail to pass the point of compression, when there is created another cause for a misfire.

Generated on 2024-09-30 01:23 GMT / https://hdl.handle.net/2027/uiug.30112007838433
Public Domain, Google-digitized / http://www.hathitrust.org/access_use#pd-google
Digitized by Google
Original from UNIVERSITY OF ILLINOIS AT URBANA-CHAMPAIGN

Government Bulletin on Brick Highways

The Office of Public Roads and Rural Engineering, U. S. Department of Agriculture, has recently issued bulletin No. 373, 'Brick Roads,' by V. M. Peirce and C. H. Moorefield. The principal advantages which brick roads possess, according to the authors, may be stated briefly as follows: (1) They are durable under practically all traffic conditions: (2) they afford easy traction and moderately good foothold for horses; and (3) they are easily maintained and kept clean.

The principal disadvantage is the high first cost. The defects which frequently result from lack of uniformity in the quality of the brick or from poor construction are usually to be traced indirectly to an effort to reduce the first cost, or else to a popular feeling that local materials should be used, even when of inferior quality.

The selection of the brick, one of the most essential features for the success or failure of such pavements, depends, to a large extent, on the way in which the brick will withstand the kind of traffic for which the road is designed. Color, specific gravity, absorptive power, or even the crushing strength, of brick are not necessarily reliable tests. In general, of course, the brick should be uniform in size, of regular shape, and free from ragging and deep kiln marks. Each brick should be homogeneous in texture and free from objectionable seams. Fire-cracks should be limited in number and extent. The entire brick should be vitrified and should contain neither unfused nor glassy spots. Even field inspection and laboratory analyses, unless conducted by those especially experienced, however, may prove of little value.

The test upon which highway engineers appear to place most reliance is the 'rattler' or abrasion test. In this test ten dry bricks are placed in a rattler-barrel with ten cast-iron spheres $3\frac{3}{4}$ in. diam. and weighing 7.5 lb. each, and enough spheres $1\frac{7}{8}$ in. diam. and weighing 0.95 lb. each to make up 300 pounds of metal. The loaded rattler-barrel is then revolved continuously 1800 times at a speed not less than $29\frac{1}{2}$ nor exceeding $30\frac{1}{2}$ revolutions per minute. When the test is over the results are reckoned in terms of the loss in weight sustained by the brick. No piece of brick which weighs less than 1 lb. is considered as having withstood the test.

Good paving-brick under this test ordinarily will lose from 18 to 24% of the original weight. The specialists point out, however, that it is advisable to require a minimum as well as a maximum loss which any sample may sustain. This is necessary for insuring against too much variation between the softest brick and the hardest brick which may be supplied.

The remainder of the 40-page bulletin is devoted to detailed descriptions and diagrams, showing proper methods of construction of brick roads, including the preparation of the road-bed, the construction of the foundation or base, the laying of the brick, the construction of curbing, expansion cushions, and the final finishing of the pavement. The paper also includes a chapter on cost of brick pavements. The following approximate formula is suggested:

Cost of pavement per sq. yd. $= 1.90\,L + 0.213\,C + 0.138\,S + 0.157\,A + 0.04\,B$, where

L = cost of labor per hour,

C = cost of cement per barrel,

S = cost of sand per cubic yard,

A = cost of coarse aggregate per cu yd., and

B = cost of brick per 1000.

The above cost includes preparation of subgrade, a 6-in. concrete base, and suitable curbs, but no heavy grading. It should usually be increased by about 10% to allow for depreciation on tools and machinery and contingencies. For a different thickness of foundation, it may be assumed that each inch added or subtracted will make a difference of from 8 to 12c. in the cost per square yard. Special emphasis is laid on the maintenance of brick roads and the need for proper engineering supervision in their construction. An appendix is devoted to typical specifications for constructing brick roads.

STUDY OF RAIL JOINTS AND BONDS ON ELECTRIC ROADS

'Modern Practice in the Construction and Maintenance of Rail Joints and Bonds in Electric Railways' is the title of Technologic Paper No. 62 of the Bureau of Standards. The paper is largely a compilation of information in the nature of data and opinions submitted by 42 electric-railway companies which answered inquiries sent out by the bureau. Analysis of the data shows that soldered bonds have been demonstrated to be unsuccessful and are now practically obsolete, while all other types of standard bonds are capable of giving good results, provided they are installed carefully. Loose rail-joints are shown to be the most prevalent cause of bond failures. As a result there appears to be a marked tendency toward the adoption of improved methods and materials in rail-joint construction. The adoption of various types of welded joints to take the place of the common bolted-joint appears to be in progress in most of the larger cities. The whole problem of track bonding is shown to be in a state of evolution because of new inventions and recent improvements in methods of construction. Complete standardization of these practices cannot be expected for some time to come.

Generated on 2024-09-30 01:27 GMT / https://hdl.handle.net/2027/uiug.30112007838433
Public Domain, Google-digitized / http://www.hathitrust.org/access_use#pd-google
Digitized by Google
Original from UNIVERSITY OF ILLINOIS AT URBANA-CHAMPAIGN

Drainage of Irrigated Land in the San Joaquin Valley

Bulletin No. 273 of the Agricultural Experiment Station of the University of California, by Walter W. Weir, drainage engineer for the U. S. Department of Agriculture, describes the drainage of a 150-acre tract on the Kearney estate, now the property of the University, situated eight miles west of Fresno. The tract was formerly a profitable vineyard, but because of a rising water-table and the accompanying accumulation of alkaline salts, had deteriorated until it had become an inferior pasture. Preliminary investigations in 1913 showed dangerously large amounts of alkaline salts throughout most of the tract. At certain times of the year the water-table was less than two feet from the surface, and during most of the growing season it was undesirably high.

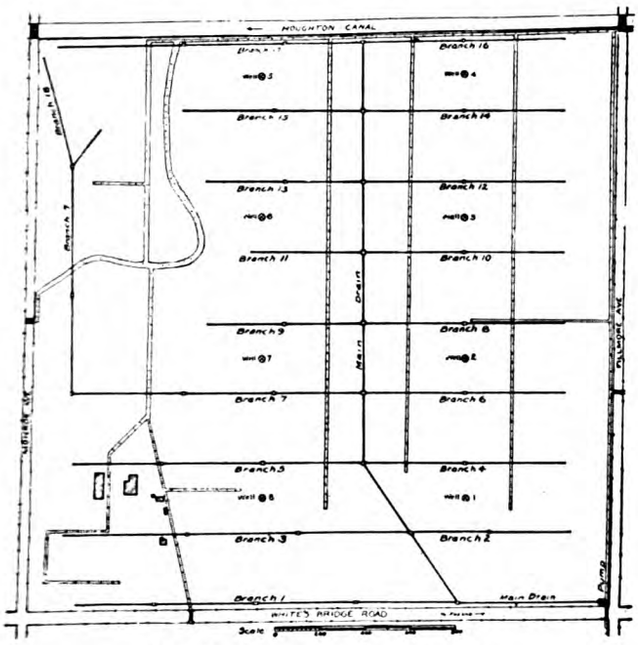

FIG. 1. MAP OF DRAINAGE SYSTEM.

The drainage system shown in Fig. 1 was constructed during November and December 1913. The main drain was originally of 6, 8, and 12-in. tile, with some 12-in. sewer-pipe, but the 6 and 8-in. tile were replaced later by 10 and 12-in. tile. The average depth of trench was 7 ft. The laterals were of 6-in. tile placed at an average depth of 5 ft. 9 in. Each piece of tile was laid to grade with abutting joints, no provision being made against silt washing into the tile.

Concrete silt-wells are placed along the main drain at the point of entrance of each lateral, and also about 500 ft. apart on the laterals. The bottom of the silt-wells was 18 in. below the trench-grade. It was afterward decided that all the silt-wells on the laterals except one on lateral No. 7 could have been omitted and that the remaining wells could have been constructed of redwood instead of concrete. A reinforced concrete sump 5½ ft. square and 16 ft. deep was constructed at the south-east corner of the tract. At first water was pumped from the sump with a 3½-in. vertical centrifugal pump direct-connected to a 5-hp. motor.

The tile cost delivered $0.0725 per ft. for the 6-in., $0.13 for the 8-in., and $0.26 for the 12-in. The system was constructed by contract, the contractor being paid a certain commission over the cost of the system, or practically a charge for superintendence. The cost of furnishing and laying the tile was as follows:

Item—	Total	Cost per ft.
Tile	$2018.55	$0.0924
Digging and laying	2750.67	0.1259
Distributing	184.75	0.0085
Backfilling	293.99	0.0135
Supplies and blacksmithing	821.17	0.0376
	$6370.93	$0.2917

The superintendence charge appears to have been distributed over these items.

The entire cost of the system was as follows:

Item—	Total	Per acre
Tile	$2018.55	$13.37
Digging and laying	2750.67	18.23
Distributing tile	184.75	1.22
Backfilling	293.99	1.94
Supplies and blacksmithing	821.17	5.44
Sump	460.00	3.05
Silt wells	1163.55	7.70
Crossings	278.24	1.84
Pump equipment	561.35	3.71
Superintendence	466.25	3.09
	$8998.52	$59.59

After the completion of the drainage system, the land was re-checked and the irrigation system repaired, preparatory to flooding the land. Repairing the irrigation system cost $235.17, and re-checking and leveling, $725.56, making a total cost of the system at the time flooding was commenced of $9959.25, or $65.95 per acre.

Pumping and flooding the land was commenced on February 23, 1914. The main pump being too small to handle the water, an auxiliary pump was placed at one of the silt-wells. Later the main pump was replaced by a 5-in. horizontal centrifugal pump, direct-connected to a 7½-hp. motor. As already mentioned larger tile was placed in part of the main ditch the 6 and 8-in. tile not being large enough.

With the improvement of conditions resulting from the flooding, Bermuda grass appeared on most of the tract and it was necessary to spend a considerable amount of money in plowing and other measures to eradicate it.

The cost of the work during the 1914-1915 and the 1915-1916 seasons is shown below:

Generated on 2024-09-30 01:24 GMT / https://hdl.handle.net/2027/uiug.30112007838433
Public Domain, Google-digitized / http://www.hathitrust.org/access_use#pd-google
Digitized by Google
Original from UNIVERSITY OF ILLINOIS AT URBANA-CHAMPAIGN

1914-1915 Item—	Total	Per acre
New pump equipment	$377.10	$2.49
Tile replaced	373.76	2.47
Labor replacing tile	686.50	4.55
For flooding	218.06	1.44
Pumping (both pumps)	684.02	4.54
Auxiliary pump	148.84	0.98
Plowing (Bermuda grass control)	296.70	1.97
Maintenance of tile line	28.00	0.18
	$2812.98	$18.63

Item— 1915-1916	Total	Per acre
Maintenance and repairs to drain and pump	$ 70.64	$0.47
Repairs to irrigation system	95.50	0.63
Pumping costs (power, etc.)	278.15	1.90
Flooding	149.38	0.99
Control of Bermuda grass	1843.48	12.21
	$2447.15	$16.20
Total for project, January, 1916	$15,219.38	$100.78

The bulletin states that these figures do not include planting and harvesting Egyptian corn on part of the tract in 1914, and hay in 1916, the water taxes for the three years, nor rebate on tile, pump, and other equipment replaced. It might also be noted that they do not include interest during and after construction, depreciation on equipment, nor apparently, superintendence, except during the construction period.

During 1915 the pump was operated almost continuously from March 22 to August 20, discharging 144,440,000 gal., or 1.52 cu. ft. per second, or about 2.8 acre-feet over the tract. During 1916, the pump was operated from April 10 to September 25, discharging 159,966,000 gal., or 1.51 cu. ft. per second, or about 3.1 acre-feet over the tract.

The result of these operations was that a good crop of grain-hay was raised in 1916 and the land is now in condition to be put into alfalfa. While the total cost of reclamation was about $100 per acre, it should be remembered that the cost of placing the land in an irrigable condition and of eradicating the Bermuda grass, neither item being properly chargeable to drainage, was about $20 per acre. Changes in the original system because of faulty design cost $20, making a possible reduction to $60 per acre.

It is believed that the lateral drains could have been placed 400 ft. apart, instead of 315 ft., and that they should have been 6½ to 7 ft. deep. Drainage systems under similar conditions should be designed to remove at least 1 cu. ft. per second for each 100 acres, especially where the tract to be drained is surrounded by undrained land. This latter provision suggests the probability of a decreased reclamation cost under some co-operative district plan.

Wooden merchant-vessels, 500 tons or over, now under construction in the United States, number 116 with a total capacity of 156,615 gross tons. Of this number, 35 vessels with a capacity of 63,150 tons are being constructed at Columbia River and Puget Sound yards, and 7 with a capacity of 12,200 tons are being constructed at California yards.

RAILWAY STATISTICS FOR 1916

The year 1916 has been one of record-breaking traffic and earnings for the railways of the United States. Their increased business is reflected in statistics regarding new construction and orders for equipment during the year which have been gathered from official sources and published by the *Railway Age Gazette.*

During 1916, 1098 miles of new railroad has been built. With the exception of 1915, when 933 miles was built, this is the smallest amount of new construction in any year since the Civil War. There was a reduction in second track built, this amounting to 312 miles, as compared with 356 miles in 1915 and 565 miles in 1914. Thirty-one miles of third, fourth and other main tracks was constructed, as compared with 65 miles in the preceding year. The largest amount of new work was in Montana, where 99 miles of railway was constructed, South Carolina being second with 92 miles, and California third with 78 miles. New work in Canada shows a heavy decline. Only 290 miles of railroad was constructed against 718 miles in 1915 and 978 miles in 1914. The length of new line projected in the United States is 727 miles, that being surveyed, 2126 miles, and that being actually built, 1060 miles.

The increase in the purchase of new equipment was relatively greater than the increase in new construction. The following table gives the number of cars and locomotives ordered by the railways of the United States during the past three years:

	1916	1915	1914
Freight-cars	170,000	107,796	80,264
Passenger-cars	2,349	3,092	2,002
Locomotives	2,923	1,573	1,265

The number of freight cars ordered for domestic service is larger than in any year since 1912.

In addition to the orders received from the railways of the United States, the locomotive and car-builders of this country received largely increased orders for equipment for export. The number of freight-cars ordered for export was 25,632, as compared with 13,222 in 1915; and the number of locomotives ordered for export was 2983, as compared with 850 in 1915. The number of locomotives ordered for both United States and foreign railroads was 5906, which exceeds the number of locomotives ordered from the locomotive-builders of the United States in any year since 1905.

The year closes with 63 railways, operating 34,559 miles of line, in the hands of receivers, against 38,661 miles at the beginning of 1916. The principal changes during 1916 were caused by the St. Louis & San Francisco, operating 4749 miles, some of its subsidiaries, operating 1000 more; the Western Pacific, operating 943 miles; and the Atlanta, Birmingham & Atlantic, operating 633 miles, being taken out of the hands of receivers, while the Boston & Maine, with 2300 miles, and the Texas & Pacific, with 1944 miles, went into receivership. The number of roads placed in receivers' hands during the year was eight.

Generated on 2024-09-30 01:30 GMT / https://hdl.handle.net/2027/uiug.30112007838433
Public Domain, Google-digitized / http://www.hathitrust.org/access_use#pd-google
Digitized by Google
Original from UNIVERSITY OF ILLINOIS AT URBANA-CHAMPAIGN

Industrial Progress

NEW TYPE OF DRILL-SHARPENER

A new design of pneumatic drill-sharpener has recently been developed by the Denver Rock Drill Manufacturing Co., and is now on the market. It consists of a pneumatic dolly-hammer and swaging-ram mounted on a single pedestal. This

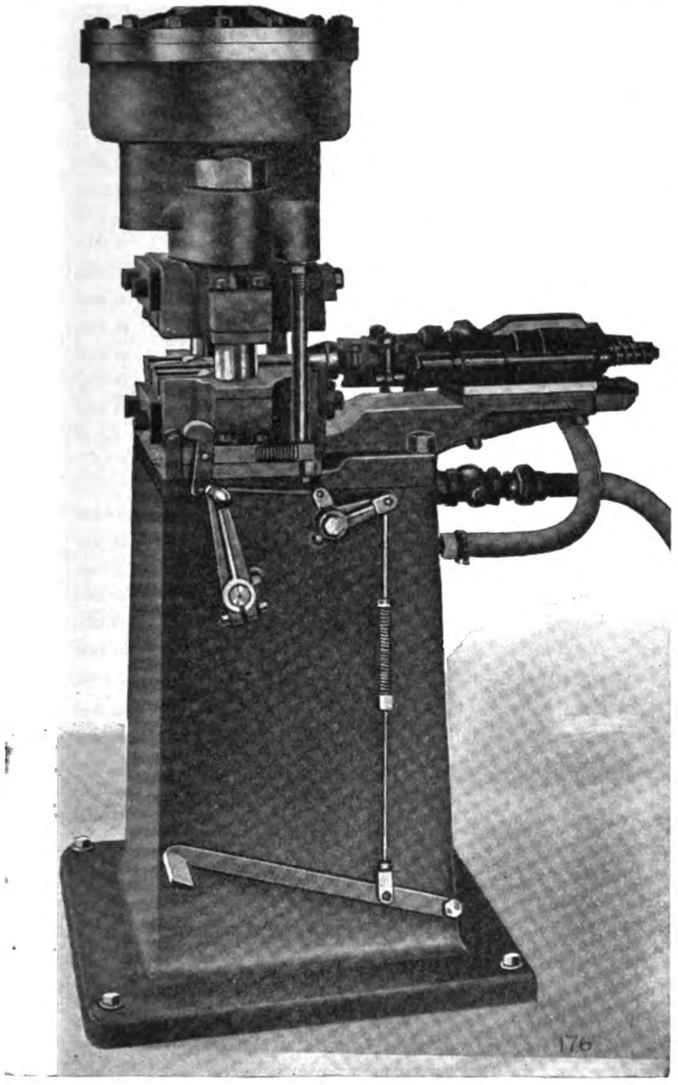

THE NEW DRILL-SHARPENER.

ram not only operates the swaging-dies, but it also clamps the steel and operates the steel cutter. The ram-piston cylinder is fixed directly above the die-blocks, which the manufacturers claim not only gives it a powerful clamping effect, but is also responsible for the effectiveness of this machine under low air-pressures. The ram-piston is returned to its upward position by two small constant-pressure pistons, and when a blow is struck with the ram, or is brought down for the purpose of clamping the steel, the air in these constant pressure-cylinders is merely forced back into the pipe-line. The dolly-hammer is of the valveless type, and uses the air expansively, which contributes to the usual economy of air consumption that characterizes this machine. No springs are used in connection with the dollies, as they are returned by a small constant-pressure piston. This feature facilitates the changing of dollies, as there is no spring-pressure to overcome, and it also eliminates all trouble from spring breakage. All the operations of the machine are controlled by a single lever, which is so situated that the operator can readily observe the workings of the steel. There is but a single air-connection to the machine, which consists of a flexible hose. No exhaust-pipe is required, as the air is exhausted into the hollow base of the pedestal, and this is so muffled as to be hardly noticeable. The manufacturers have also developed a smaller drill-sharpener which they expect to put on the market in the near future.

A NEW RANGE-FINDER AND SLOPE-CARD

A range-finder and slope-card that should be of use to civil engineers as well as military men has recently been devised by Major C. R. Young, of Toronto, Canada. It is based upon the principle that it is easier to estimate the size of familiar

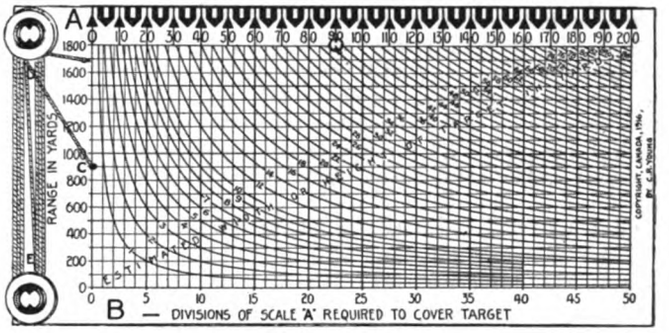

RANGE-FINDER SIDE OF CARD.

objects than their distance from the eye. In using the range-finder select the dimension of the object which can be estimated most accurately. Placing the second knot of the string close to the eye, hold the card at right angles to the string so that the string is taut. Place the zero mark of scale *A* at one extremity of the dimension and note scale at other extremity. Find the corresponding scale reading on *B*. Follow vertically from this point to the curve giving the estimated dimension, thence horizontally to the required distance. The other side of the card gives a simple clinometer.

Book Reviews

How to Make Low-Pressure Transformers. By F. E. Austin. P. 17. Ill. F. E. Austin, Hanover, N. H. For sale by *Mining and Scientific Press*, San Francisco. Price, $0.40.

That a third edition of this book has become necessary in less than two years from the date of the appearance of the first edition, is an indication of its usefulness. With these instructions a simple and efficient transformer may be constructed to 'step down' a 60-cycle 110 to 220-volt circuit to as low as 8 volts. A few directions are also given for the construction of 'step-up' transformers.

Elements of Hydraulics. By S. E. Slocum. P. 324. Ill., index. McGraw-Hill Book Co., Inc., New York. For sale by *Mining and Scientific Press*, San Francisco. Price, $2.50.

This volume is divided into four sections. Section I on the Pressure of Water, is devoted to the ordinary applications of hydrostatics to the design of hydraulic presses, jacks, and similar machinery, the strength of pipes under pressure, and the equilibrium of floating bodies. Section II on the Flow of Water discusses flow over weirs, through orifices, and in pipes and open channels. Siphons and siphon-spillways are considered, also the Pitot tube and the Venturi meter. Section III on Energy of Flow, is probably the most valuable, since it contains a large amount of information regarding recent developments in hydraulic machinery, particularly turbines and centrifugal pumps. Other subjects considered in this section

Generated on 2024-09-30 01:29 GMT / https://hdl.handle.net/2027/uiug.30112007838433
Public Domain, Google-digitized / http://www.hathitrust.org/access_use#pd-google
Digitized by Google
Original from UNIVERSITY OF ILLINOIS AT URBANA-CHAMPAIGN

are impulse wheels, hydraulic rams, surge-tanks, and the question of water hammer. Section IV is simply an appendix containing a number of useful hydraulic and other mathematical tables. The book is well illustrated. At the end of the discussion of each subject in the text there are a number of practical problems, making the volume particularly useful as a text-book but it will also be of value to the practising engineer.

HYDRO-ELECTRIC POWER. By Lamar Lyndon. Volume I. Hydraulic Development and Equipment. P. 488. Ill., index. Volume II. Electrical Equipment and Transmission. P. 350. Ill., index. Price, $3.50. McGraw-Hill Book Co., Inc., New York. For sale by *Mining and Scientific Press*, San Francisco.

These two volumes comprise one of the most comprehensive treatises on water-power development that has been issued. Volume I deals with the hydraulic side of power-development. The chapter-headings are General Conditions, Flow in Streams, Weirs and Orifices, Power Variation and Storage, Artificial Waterways, Pipe-Lines and Penstocks, Dams, Movable Crests for Dams, Headworks, Water-Wheels, and Speed Regulation. The chapter on dams is particularly noteworthy because the author disagrees with the commonly accepted theory of uplift pressure under solid dams. Volume II deals with electrical equipment. The chapter-headings are Alternating-Current Generators, Transformers, Switchboards, Cranes, Design and Testing of Power Stations, Wires and Cables, Insulators, Pole and Tower Lines, Electric Circuits, Calculation of Transmission Lines, Deflection and Mechanical Stresses, Line Protection and Accessories, and Sub-stations. The book is well-illustrated and every effort has been made for clearness and simplicity in the text without undue length. There are a number of useful mathematical and electrical tables in the text and at the end of Volume I. The definition of the symbols used in the various formulas appears near the formulas themselves at the risk of occasional repetition, which, however, is far less objectionable than searching through the book for definitions would be. The two volumes will be valuable to those interested in hydro-electric development.

PRACTICAL OIL GEOLOGY. By Dorsey Hager. Second edition. P. 179. Ill., index. McGraw-Hill Book Co., Inc., New York. For sale by *Mining and Scientific Press*, San Francisco. Price, $2.

In preparing the second edition of this useful book, it has been revised and enlarged and a short chapter upon natural gas added. The chapter-headings are as follows: Petroleum, its Origin, Accumulation, and Physical and Chemical Properties, Stratigraphy, Structural Geology, Prospecting and Mapping, Locating Drill-Hole Sites, Factors in Oil-Well Drilling and Oil Production, Water, and Natural Gas. The last chapter is entitled Cautions and is mainly devoted to the errors into which the geologist who is not a practical oil-man, occasionally falls. The book should be of value to any one interested in the oil industry.

Engineers' Note Book

DEPRECIATION TABLES

The accompanying tables, taken from the final report of the Committee on Valuation of the American Society of Civil Engineers give the amount to be allowed for depreciation for different lives and interest rates under the so-called compound-interest or equal-annual-payment method. Thus for an article valued at $100, having a 20-year life, no salvage value, and interest at 5%, the allowance for depreciation for the first year is $3.02. The allowance for interest is $5, making the total for interest and depreciation, $8.02. The second year the depreciation is $3.18 and the interest on the depreciated value of $96.98 is $4.84, making a total of $8.02 as before. The tables can also be used for articles having a salvage value at the end of their useful life.

DEPRECIATION TABLES

Age, in years.	Interest Rate. 4%		Interest Rate. 5%		Interest Rate. 6%		Interest Rate. 7%	
	Value.	Dep.	Value.	Dep.	Value.	Dep.	Value.	Dep.
0	100.0000	18.4627	100.0000	18.0975	100.0000	17.7396	100.0000	17.3891
1	81.5373	19.2012	81.9025	19.0023	82.2604	18.8041	82.6109	18.6063
2	62.3361	19.9693	62.9002	19.9525	63.4563	19.9322	64.0046	19.9087
3	42.3668	20.7680	42.9477	20.9501	43.5241	21.1282	44.0959	21.3024
4	21.5988	21.5988	21.9976	21.9976	22.3959	22.3959	22.7935	22.7935
5	0.0000	100.0000	0.0000	100.0000	0.0000	100.0000	0.0000	100.0000
10-YEAR LIFE.								
0	100.0000	8.3291	100.0000	7.9506	100.0000	7.5868	100.0000	7.2377
1	91.6709	8.6623	92.0495	8.3480	92.4132	8.0420	92.7623	7.7444
2	83.0086	9.0088	83.7015	8.7654	84.3712	8.5245	85.0179	8.2865
3	73.9998	9.3690	74.9361	9.2037	75.8467	9.0360	76.7314	8.8666
4	64.6308	9.7439	65.7324	9.6638	66.8107	9.5782	67.8648	9.4872
5	54.8869	10.1336	56.0686	10.1470	57.2325	10.1528	58.3776	10.1518
6	44.7533	10.5389	45.9216	10.6544	47.0797	10.7620	48.2263	10.8619
7	34.2144	10.9606	35.2672	11.1871	36.3177	11.4078	37.3644	11.6223
8	23.2538	11.3989	24.0801	11.7464	24.9099	12.0922	25.7421	12.4358
9	11.8549	11.8549	12.3337	12.3337	12.8177	12.8177	13.3063	13.3063
10	0.0000	100.0000	0.0000	100.0000	0.0000	100.0000	0.0000	100.0000
15-YEAR LIFE.								
0	100.0000	4.9941	100.0000	4.6342	100.0000	4.2963	100.0000	3.9795
1	95.0059	5.1939	95.3658	4.8660	95.7037	4.5540	96.0205	4.2580
2	89.8120	5.4016	90.4998	5.1092	91.1497	4.8273	91.7625	4.5561
3	84.4104	5.6177	85.3906	5.3646	86.3224	5.1170	87.2064	4.8750
4	78.7927	5.8424	80.0260	5.6330	81.2054	5.4239	82.3314	5.2162
5	72.9503	6.0760	74.3930	5.9146	75.7815	5.7493	77.1152	5.5814
6	66.8743	6.3192	68.4784	6.2108	70.0322	6.0944	71.5338	5.9722
7	60.5551	6.5719	62.2681	6.5209	63.9378	6.4601	65.5616	6.3901
8	53.9832	6.8348	55.7472	6.8468	57.4777	6.8476	59.1715	6.8375
9	47.1484	7.1081	48.9004	7.1892	50.6301	7.2584	52.3340	7.3160
10	40.0403	7.3925	41.7112	7.5487	43.3717	7.6941	45.0180	7.8282
11	32.6478	7.6882	34.1625	7.9261	35.6776	8.1555	37.1898	8.3762
12	24.9596	7.9957	26.2364	8.3224	27.5221	8.6450	28.8136	8.9625
13	16.9639	8.3156	17.9140	8.7385	18.8771	9.1636	19.8511	9.5899
14	8.6483	8.6483	9.1755	9.1755	9.7135	9.7135	10.2612	10.2612
15	0.0000	100.0000	0.0000	100.0000	0.0000	100.0000	0.0000	100.0000
20-YEAR LIFE.								
0	100.0000	3.3582	100.0000	3.0243	100.0000	2.7185	100.0000	2.4393
1	96.6418	3.4925	96.9757	3.1755	97.2815	2.8815	97.5607	2.6100
2	93.1493	3.6322	93.8002	3.3342	94.4000	3.0545	94.9507	2.7928
3	89.5171	3.7775	90.4660	3.5010	91.3455	3.2377	92.1579	2.9882
4	85.7396	3.9286	86.9650	3.6760	88.1078	3.4320	89.1697	3.1974
5	81.8110	4.0857	83.2890	3.8598	84.6758	3.6379	85.9723	3.4213
6	77.7253	4.2492	79.4292	4.0528	81.0379	3.8561	82.5510	3.6607
7	73.4761	4.4191	75.3764	4.2554	77.1818	4.0876	78.8903	3.9169
8	69.0570	4.5959	71.1210	4.4682	73.0942	4.3328	74.9734	4.1912
9	64.4611	4.7797	66.6528	4.6916	68.7614	4.5928	70.7822	4.4845
10	59.6814	4.9709	61.9612	4.9262	64.1686	4.8684	66.2977	4.7985
11	54.7105	5.1698	57.0350	5.1725	59.3002	5.1604	61.4992	5.1343
12	49.5407	5.3766	51.8625	5.4311	54.1398	5.4701	56.3649	5.4938
13	44.1641	5.5916	46.4314	5.7027	48.6697	5.7982	50.8711	5.8783
14	38.5725	5.8152	40.7287	5.9878	42.8715	6.1462	44.9928	6.2898
15	32.7573	6.0479	34.7409	6.2872	36.7253	6.5149	38.7030	6.7301
16	26.7094	6.2898	28.4537	6.6016	30.2104	6.9059	31.9729	7.2012
17	20.4196	6.5414	21.8521	6.9317	23.3045	7.3202	24.7717	7.7052
18	13.8782	6.8031	14.9204	7.2783	15.9843	7.7593	17.0665	8.2446
19	7.0751	7.0741	7.6421	7.6421	8.2250	8.2250	8.8219	8.8219
20	0.0000	100.0000	0.0000	100.0000	0.0000	100.0000	0.0000	100.0000

Generated on 2024-09-30 01:23 GMT / https://hdl.handle.net/2027/uiug.30112007838433
Public Domain, Google-digitized / http://www.hathitrust.org/access_use#pd-google
Digitized by Google
Original from UNIVERSITY OF ILLINOIS AT URBANA-CHAMPAIGN

New Publications

PETROLEUM IN 1915. Part of Mineral Resources of the United States. 11: 27. P. 202. Statistical summary of production in the United States and foreign oilfields. U. S. Geological Survey, Washington, D. C.

SURFACE WATER SUPPLY OF THE UNITED STATES, PACIFIC SLOPE BASINS IN CALIFORNIA. Water-Supply Paper No. 361, U. S. Geological Survey, Washington, D. C. P. 508. Ill., index. Contains gaugings of California streams during 1913.

FUNDAMENTALS OF A COST SYSTEM FOR MANUFACTURERS. A SYSTEM OF ACCOUNTS FOR RETAIL MERCHANTS. P. 31 and 19. The Federal Trade Commission, Washington, D. C. These two pamphlets contain a brief outline of some subjects with which the engineer as well as the manufacturer and merchant should be better acquainted.

ACCURACY OF STREAM-FLOW DATA. By N. C. Grover and J. C. Hoyt. P. 7. Water-Supply Paper No. 400-D, U. S. Geological Survey, Washington, D. C. Discusses the various factors affecting the accuracy of discharge measurements, including permanence of the stage-discharge relation, precision of the discharge-rating curve, refinement of gauge readings, frequency of gauge readings, and methods of applying the daily gauge heights to the rating table.

BOLETIN DEL PETROLEO. Organo de la Secretaria de Fomento. Office, 2 A Calle de Tacula No. 7, Mexico City. A. G. Perez, administrator. Price ₱18 per annum, or ₱10 per half-year. Issued twice a month. This is an official publication dealing with the oil industry of Mexico. The August number consists of 112 pages, with illustrations and statistical matter. Those interested in the work in the Tampico and Tuxpan districts will find some useful notes.

Civil Service Examinations

MARINE DRAFTSMAN, February 13. Panama Canal Service. Salary $1200 to $1500. Graduation from a technical school or else two years' experience required. Age 20 to 45. Application form 2118. Candidates will not be assembled for examination.

EXPERT RADIO AID FOR AVIATION. Salary $6 per day. Three years' training in a technical school and three years' experience as a radio operator required. Age 25 to 45. Application form 2118. Candidates will not be assembled for examination.

ASSISTANT ENGINEER IN FOREST PRODUCTS, February 27-28. Salary $900 to $1200. Graduation from a technical school or else four years' experience in design and construction required. Age 20 to 40. Application form 1312. Usual places of examination.

CHIEF PETROLEUM TECHNOLOGIST, February 26. Salary $4800. Bureau of Mines. Graduation from a technical school and at least three years' experience in petroleum operations and oil-field development required. Age 30 to 45. Application form 2118. Candidates will not be assembled for examination.

Engineering Societies

IDAHO SOCIETY OF ENGINEERS. Ira F. Schaffner, secretary, Boise.

Los Angeles Section of AMERICAN SOCIETY OF MECHANICAL ENGINEERS. Ford W. Harris, secretary, 1029 Higgins building.

Los Angeles Section of AMERICAN INSTITUTE OF ELECTRICAL ENGINEERS. Carl E. Johnson, secretary, 459 East Third street.

OREGON SOCIETY OF ENGINEERS. Orrin E. Stanley, secretary, room 409, City Hall, Portland.

Portland Section, AMERICAN INSTITUTE OF ELECTRICAL ENGINEERS. Paul Lebenbaum, secretary, 45 Union Depot.

Portland Association of Members of AMERICAN SOCIETY OF CIVIL ENGINEERS. Charles McGonigle, president, care Western Sheet Metal Works.

San Francisco Association of Members of AMERICAN SOCIETY OF CIVIL ENGINEERS. E. T. Thurston, Jr., secretary, Mechanics Institute building.

San Francisco Section of AMERICAN SOCIETY OF MECHANICAL ENGINEERS. Carl F. Braun, secretary, Hooker & Lent building.

San Francisco Section of AMERICAN INSTITUTE OF ELECTRICAL ENGINEERS. A. G. Jones, secretary, 811 Rialto building.

Southern California Association of Members of AMERICAN SOCIETY OF CIVIL ENGINEERS. Wilkie Woodard, secretary, 435 Consolidated Realty building, Los Angeles.

UTAH SOCIETY OF ENGINEERS. Hugh C. Lewis, secretary, Capitol building, Salt Lake City, Utah.

Coming Conventions

AMERICAN ROAD BUILDERS' ASSOCIATION. Annual convention, Boston, Mass., February 5-9, 1917. E. L. Powers, secretary, 150 Nassau street, New York. The National Good Roads Show of Materials and Machinery will be held in connection with this convention.

TENTH ANNUAL CEMENT SHOW, Chicago, February 7-15, 1917.

AMERICAN CONCRETE INSTITUTE. Annual meeting, Chicago, February 8-10. H. D. Hynds, secretary, 30 Broad street, New York.

AMERICAN ASSOCIATION OF ENGINEERS. Annual convention, Chicago, February 8-10. Headquarters at 29 South La Salle street, Chicago.

NATIONAL BUILDERS' SUPPLY ASSOCIATION, Chicago, February 12-13. L. F. Desmond, secretary, 1211 Chamber of Commerce, Chicago, Illinois.

AMERICAN CONCRETE PIPE ASSOCIATION. Annual convention, Chicago, February 12-14. E. S. Hanson, secretary, 538 South Clark street, Chicago.

SOUTHWESTERN CONCRETE ASSOCIATION. Annual meeting, Kansas City, Mo., February 19-24. Charles A. Stevenson, secretary, 1413 West 10th street, Kansas City.

MID-WEST CEMENT USER'S ASSOCIATION. Annual convention. Omaha, Neb., March 6-10, 1917. Frank Whipperman, secretary, 28th avenue and Sahler street, Omaha.

PORTLAND CEMENT ASSOCIATION. Spring meeting, San Francisco, April 16-18. H. E. Hilts, Pacific Coast representative, Rialto Bdg., San Francisco.

Personal

J. B. YEON has been re-appointed roadmaster for Multnomah county, Oregon.

FLOYD C. BROWN has been appointed assistant city engineer of San Jose, California.

A. M. JUST has been appointed secretary for the Sacramento County Highway Commission.

A. E. CHANDLER has been re-appointed member of the California State Water Commission.

S. L. STOVALL has been appointed chief construction engineer for the Crocker-Huffman Land & Water Co. with headquarters at Merced, California.

L. F. PRICE, of Guayaquil, Ecuador, is in San Francisco. Mr. Price has been engaged in engineering work in South America for the past 14 years.

CHARLES RICHARDSON has been appointed county surveyor of Marin county, California, succeeding his father, GEORGE L. RICHARDSON, who died recently.

Colonel THOMAS H. REES, who has been in charge of the U. S. Engineer Office at San Francisco, will leave on February 5 for the Philippine Islands, having received orders to change

Generated on 2024-09-30 01:29 GMT / https://hdl.handle.net/2027/uiug.30112007838433
Public Domain, Google-digitized / http://www.hathitrust.org/access_use#pd-google
Digitized by Google
Original from UNIVERSITY OF ILLINOIS AT URBANA-CHAMPAIGN

stations with Colonel EDWARD BURR, who will succeed him at San Francisco.

H. D. H. CONNICK, formerly director of public works for the Panama-Pacific Exposition, has gone to New York to take a position with the American International Company.

HERNAN LOIS and LOUIS MATTE, engineers in the employ of the Chilean government, are in California. They are studying the principal irrigation projects in the United States.

C. H. SOUTHWORTH has been appointed engineer in charge of irrigation on the Fort Hall, Utah, Indian Reservation, succeeding RICHARD J. WARD, who has been transferred to the Arizona district.

The Engineers' Club of Seattle has elected the following officers for the coming year: ERNEST B. HUSSEY, president; R. H. OBER, vice-president; J. T. DOVEY, secretary; HOWARD JOSLYN, treasurer.

A. H. BABCOCK addressed the San Francisco Section of the American Institute of Electrical Engineers on January 26 on 'Some Personal Impressions of the Norfolk & Western Railroad Electrification.'

W. J. ROBERTS has been re-appointed chief engineer for the inter-county board that has charge of improvement work on the White and Puyallup rivers on behalf of King and Pierce counties, Washington.

ARTHUR M. PORTER, formerly city engineer of Redwood City, California, has resigned in order to engage in hydro-electric work with headquarters in San Francisco. He has been succeeded by C. L. DIMMIT.

O. G. HOPKINS, formerly superintendent for the Boca & Loyalton Railroad, has been appointed superintendent of construction and operation for the Deep Creek Railroad, now being constructed near Wendover, Utah.

The Pacific Northwest Society of Engineers has elected the following officers for the coming year: R. M. DWYER, president; J. L. HALL, CARL H. REEVES, and A. L. VALENTINE, vice-presidents; and HOWARD JOSLYN, treasurer.

T. D. ALLIN and R. V. ORBISON addressed a meeting of the Los Angeles Section of the American Society of Mechanical Engineers on January 24, the subject being 'How Cities in the United States are Disposing of Their Sewage.'

M. SULLIVAN has been appointed general superintendent for S. N. Clark, who is constructing the new sanitary-sewer system for Fresno, California, the contract having been assigned to him by the Coast Construction Company.

R. K. STOCKWELL, who has been chief engineer and superintendent of construction for the Braden Copper Co. at Raucaque, Chile, has gone to Salt Lake City, Utah, where he will have charge of the office of the Robins Conveying Belt Company.

The Engineers' and Architects' Association of Southern California has elected the following officers for the coming year: A. H. KOEBIG, SR., president, A. S. BENT, and I. J. FRANCIS, vice-presidents, H. Z. OSBORNE, JR., secretary and treasurer.

M. H. PECK and F. H. TIBBETTS have been retained by the city of Vallejo, California, to consult with city engineer T. D. KILKENNY regarding methods of strengthening the city bulkhead so that the reclamation of the city tide-lands may be completed.

W. F. HUBER has been investigating conditions in the Anderson-Cottonwood irrigation district on behalf of the California State Engineering Department and will report regarding the amount of money required to complete the irrigation system of the district.

A. C. ROOT has become associated with Sloan & Robson, consulting engineers, of San Francisco. Mr. Root's headquarters will be at 329 Cory Bdg., Fresno. He will carry on a general consulting engineering practice, specializing in highway and municipal engineering, in which he has had wide experience both as an engineer and as a contractor.

W. A. WILLIAMS, formerly chief petroleum technologist for the U. S. Bureau of Mines, has resigned to become assistant to the general manager of the Empire Fuel & Gas Co., with headquarters at Bartlesville, Oklahoma. The work of the department is temporarily in charge of C. R. NARAMORE, pending the announcement of the result of a civil service examination.

W. A. CATTELL, H. S. HOWARD, and RAYMOND ASHTON have formed the firm of Cattell, Howard & Ashton, with offices in the Foxcroft Bdg., San Francisco. They are prepared to undertake engineering work in connection with railroads, bridges, buildings, foundations, harbors and terminals, water supply and irrigation, industrial plants, sewers, power development, and valuations.

At the request of the city council of Portland, Oregon, J. P. NEWELL, GEORGE C. MASON, and W. S. TURNER have been appointed by the local Association of Members of the American Society of Civil Engineers to prepare an estimate of the cost of re-building the Tanner Creek sewer. The city engineer's estimate on the cost of this work is $273,000, but although bids have been received on three separate occasions, the lowest bid was a little more than $300,000.

F. C. HERRMANN of San Francisco, who has been acting as chief engineer for the Modesto irrigation district, has tendered his resignation to take effect February 1. The various large pieces of construction which Mr. Herrmann has been supervising for the district are now practically completed, and he states that his services are no longer needed by the district. P. F. JONES will continue the hydrographic work in connection with the suit that the district now has pending against the city of San Francisco.

JOHN W. BECKMAN and HERBERT E. LINDEN have formed the Beckman & Linden Engineering Corporation, with offices in the Balboa Bdg., San Francisco. They will specialize in the development and management of chemical, metallurgical, electro-chemical, and electro-metallurgical industries, as well as hydro-electric enterprises. Mr. Beckman was formerly electro-chemical engineer for the Great Western Power Co. Mr. Linden has maintained offices at Bishop, California, specializing in water-power and irrigation work.

Commercial Paragraphs

The ERIE MACHINE SHOPS have issued a 16-page catalogue describing Erie tandem rollers.

The GENERAL ELECTRIC CO. has published bulletins No. 48702 and 48703 describing Fabroil gears.

The EMERSON PUMP & VALVE CO., of Alexandria, Virginia, has issued a 56-page catalogue describing the design and use of the Emerson steam-pump, foot-valve, and strainer.

The AMERICAN CEMENT MACHINE CO. of Keokuk, Iowa, has issued catalogue No. 17, describing the concrete-mixers, hoists, backfillers, and pumps manufactured by the company.

The SPRAY ENGINEERING CO., of Boston, Massachusetts, has issued a 16-page pamphlet describing the equipment manufactured by the company for washing and cooling air for steam-turbine generators.

The Lakewood line of contractors' equipment, Owens-Wylie concrete-chute systems, Milwaukee and Wisconsin concrete-mixers and street-pavers will be sold by the LAKEWOOD ENGINEERING CO. of Cleveland, Ohio.

The CONCRETE TILE MACHINERY CO. of Waterloo, Iowa, has published the second edition of 'The Concrete Dopebook,' containing a description of the concrete-mixers manufactured by the company, as well as a number of tables and other information for the engineer and concrete-contractor.

Generated on 2024-09-30 01:25 GMT / https://hdl.handle.net/2027/uiug.30112007838433
Public Domain, Google-digitized / http://www.hathitrust.org/access_use#pd-google
Digitized by Google
Original from UNIVERSITY OF ILLINOIS AT URBANA-CHAMPAIGN

Western Engineering

WEEKLY NEWS BULLETIN

WESTERN ENGINEERING *with* WEEKLY NEWS BULLETIN $4.50 per Year

SAN FRANCISCO, FEBRUARY 5, 1917

SINGLE COPIES WEEKLY NEWS BULLETIN 15 Cents

Contracts Pending

Bids will be Received		See Issue of News Bulletin
Feb. 5.	Bakersfield, Cal., Street Work	Jan. 29
Feb. 5.	Bellingham, Wash., Street Work	Feb. 5
Feb. 5.	Colusa, Cal., Street Work	Jan. 29
Feb. 5.	Ephrata, Wash., Machinery and Supplies	Jan. 29
Feb. 5.	Fresno, Cal., Street Work	Jan. 29
Feb. 5.	Hanford, Cal., Road Work	Jan. 29
Feb. 5.	Kanab, Utah, Buildings	Jan. 29
Feb. 5.	Los Angeles, Cal., Street Work	Feb. 5
Feb. 5.	Los Angeles, Cal., Supplies	Feb. 5
Feb. 5.	Oakland, Cal., Street Work	Jan. 8
Feb. 5.	Redwood City, Cal., Street Work	Jan. 29
Feb. 5.	San Rafael, Cal., Building	Jan. 22
Feb. 5.	Santa Cruz, Cal., Bridges	Jan. 29
Feb. 5.	Seattle, Wash., Supplies	Jan. 22
Feb. 5.	Woodland, Cal., Supplies	Feb. 5
Feb. 6.	Alameda, Cal., Street Work	Jan. 22
Feb. 6.	Bakersfield, Cal., Road Work	Jan. 22
Feb. 6.	East San Diego, Cal., Street Work	Feb. 5
Feb. 6.	Fresno, Cal., Bridge	Jan. 15
Feb. 6.	Friday Harbor, Wash., Road Work	Jan. 22
Feb. 6.	Mt. Vernon, Wash., Road Work	Jan. 29
Feb. 6.	Sacramento, Cal., Sewers	Feb. 5
Feb. 6.	Sacramento, Cal., Supplies	Feb. 5
Feb. 6.	Twin Falls, Ida., Irrigation	Feb. 5
Feb. 6.	Venice, Cal., Street Work	Feb. 5
Feb. 7.	Bakersfield, Cal., Road Work	Jan. 22
Feb. 7.	Fresno, Cal., Building	Feb. 5
Feb. 7.	Livingston, Mont., Supplies	Jan. 22
Feb. 7.	San Francisco, Cal., Sewers	Feb. 5
Feb. 7.	San Francisco, Cal., Street Work	Feb. 5
Feb. 7.	Seattle, Wash., Building	Feb. 5
Feb. 7.	Vancouver, Wash., Bridge	Feb. 5
Feb. 8.	Alameda, Cal., Street Work	Jan. 29
Feb. 8.	Bozeman, Mont., Water Supply	Jan. 29
Feb. 8.	San Rafael, Cal., Road Work	Feb 5
Feb. 8.	San Rafael, Cal., Water Supply	Feb. 5
Feb. 8.	Stockton, Cal., Bridges and Culverts	Jan. 8
Feb. 9.	Goldendale, Wash., Road Work	Feb. 5
Feb. 9.	Santa Barbara, Cal., Building	Feb. 5
Feb. 9.	Seattle, Wash., Street Work	Feb. 5
Feb. 9.	St. Helens, Ore., Street Work	Feb. 5
Feb. 10.	Astoria, Ore., Road Work	Jan. 29
Feb. 10.	Los Angeles, Cal., Building	Feb. 5
Feb. 10.	Sacramento, Cal., Buildings	Feb. 5
Feb. 10.	San Francisco, Cal., Supplies	Jan. 22
Feb. 10.	Tacoma, Wash., Street Work	Jan. 29
Feb. 10.	Waterford, Cal., Irrigation	Feb. 5
Feb. 11.	Washington, D. C., Supplies	Feb. 5
Feb. 12.	Juneau, Alaska, Building	Jan. 29
Feb. 13.	Everett, Wash., Road Work	Jan. 29
Feb. 13.	Los Angeles, Cal., Machinery and Supplies	Jan. 29
Feb. 13.	Oakland, Cal., Building	Jan. 29
Feb. 13.	Washington, D. C., Supplies	Jan. 22
Feb. 14.	Modesto, Cal., Bridges	Jan. 29
Feb. 14.	Napa, Cal., Building	Jan. 22
Feb. 14.	Portland, Ore., Bridge	Feb. 5
Feb. 14.	San Francisco, Cal., Miscellaneous	Jan. 29
Feb. 14.	San Bruno, Cal., Sewer	Feb. 5
Feb. 15.	Casa Grande, Ariz., Light and Power	Jan. 29
Feb. 15.	Fresno, Cal., Supplies	Jan. 29
Feb. 15.	Portland, Ore., Power	Jan. 29
Feb. 15.	San Francisco, Cal., Miscellaneous	Jan. 22
Feb. 15.	Washington, D. C., Supplies	Feb. 5
Feb. 16.	Los Angeles, Cal., Harbor Work	Jan. 22
Feb. 16.	Portland, Ore., Miscellaneous	Jan. 22
Feb. 17.	North Yakima, Wash., Machinery and Supplies	Feb. 5
Feb. 17.	Portland, Ore., Miscellaneous	Jan. 22
Feb. 17.	San Bernardino, Cal., Street Work	Feb. 5
Feb. 19.	Coalinga, Cal., Water Supply	Feb. 5
Feb. 19.	San Francisco, Cal., Harbor Work	Feb. 5
Feb. 19.	San Leandro, Cal., Light	Jan. 29
Feb. 19.	Stockton, Cal., Street Work	Jan. 8
Feb. 19.	Washington, D. C., Supplies	Feb. 5
Feb. 19.	Waterford, Cal., Irrigation	Jan. 22
Feb. 20.	Eureka, Cal., Water Supply	Feb. 5
Feb. 21.	Emmett, Ida., Supplies	Feb. 5
Feb. 23.	Sacramento, Cal., Buildings	Feb. 5
Feb. 25.	San Francisco, Cal., Street Work	Feb. 5
Feb. 26.	Dillon, Mont., Building	Feb. 5
Feb. 26.	Los Angeles, Cal., Miscellaneous	Feb. 5
Feb. 26.	Miles City, Mont., Supplies	Feb. 5
Feb. 26.	Seattle, Wash., Road Work	Jan. 22
Feb. 26.	Wallace, Ida., Street Work	Feb. 5
Feb. 26.	Washington, D. C., Buildings	Jan. 29
Feb. 26.	Washington, D. C., Building	Feb. 5
Feb. 26.	Washington, D. C., Machinery	Feb. 5
Feb. 27.	Seattle, Wash., Road Work	Jan. 22
Feb. 27.	Washington, D. C., Supplies	Feb. 5
Feb. 28.	Washington, D. C., Supplies	Jan. 15
Mar. 2.	Seattle, Wash., Bridge	Feb. 5
Mar. 5.	Quincy, Cal., Supplies	Feb. 5
Mar. 7.	Dillon, Mont., Bridges	Jan. 22
Mar. 16.	Seattle, Wash., Building	Feb. 5
Mar. 20.	Washington, D. C., Harbor Work	Feb. 5
June 1.	Calcutta, India, Sewer	Jan. 2

Building Permits

In SAN FRANCISCO; $2500 and over in valuation.

JANUARY 25

Two Story Frame Dwelling—Cost $2770. Vincent Virgilio, owner. W 22nd Ave 175 N Balboa.

JANUARY 26

Two Story Frame Flats—Cost $3900. A. A. Bulotti, owner. NW California and 16th Ave.

One and One-Half Story Frame Dwelling—Cost $2925. Julia A. Stumke, owner. W Diamond 45 N Surrey.

(Continued on page 84)

Generated on 2024-09-30 01:23 GMT / https://hdl.handle.net/2027/uiug.30112007838433
Public Domain, Google-digitized / http://www.hathitrust.org/access_use#pd-google
Digitized by Google
Original from UNIVERSITY OF ILLINOIS AT URBANA-CHAMPAIGN

Construction News

STREET AND ROAD WORK

Bakersfield, Cal.—Contract for construction of pavement on Sumner street has been awarded to Thompson Bros., 1514 H street, Fresno, for $22,398.30. Federal Construction Co. bid $22,408.95. California Road & Street Improvement Co. and Worswick Street Paving Co. also bid on this work.

Following were the unit prices named by Thompson Bros., who were awarded the contract for improvement of Sumner street: grading and construction of bitulithic pavement on concrete base, $0.152 per sq. ft.; concrete curbs, $0.30 per ft.; concrete gutters, $0.15 per sq. ft.; 18-in. corrugated iron and concrete culverts, $1.50 per ft.; 12-in. corrugated iron and concrete culverts, $1.25 per foot.

Bellingham, Wash.—Bids will be received until 10:30 a.m., February 5, by Chas. McLennon, city comptroller, for improvement of several streets.

Chino, Cal.—Contract for street work including 179,000 sq. ft. of 1½-in. topeka pavement on 4-in. concrete base has been awarded to George R. Curtis, 552 South St. Louis street, Los Angeles, for $22,813.32.

East San Diego, Cal.—Bids will be received until 2 p.m., February 6, by K. T. Du Bois, city clerk, for grading and construction of concrete curbs, sidewalks, and culverts on Pueblo avenue.

Eureka, Cal.—Following bids have been received for grading and macadamizing Broadway: D. C. Farnell, $1123; Elsemere & Jacobs, $1143. Both bids were rejected because too high and work will be re-advertised, separate bids being requested for grading and for macadamizing.

Everett, Wash.—Contract for construction of 2½ miles of concrete pavement on permanent highway No. 25 has been awarded to Atlas Contracting Co., Everett, for $28,184.

Goldendale, Wash.—Bids will be received until 3 p.m., February 9, by county commissioners for construction of five miles of highway.

Huntington Beach, Cal.—Contract for construction of concrete pavement and ornamental lighting system on Ocean avenue has been awarded to Leigh G. Garnsey, Central Bdg., Los Angeles, for $59,656.56.

Los Angeles, Cal.—Bids will be received until 2 p.m., February 5, by J. C. Hassett, secretary Board of Park Commissioners, for 13,000 sq. ft. of grading and concrete paving at Griffith park.

Contract for improvement of Mariposa avenue has been awarded to William Liddington, 420 East 60th street, for $1614.60.

Contract for improvement of Amador street has been awarded to Cummings & Vincent, 1802 West 22nd street, for $4397.72.

Merced, Cal.—Bond issue of $1,250,000 for construction of county highway system is proposed.

City council has adopted specifications for paving several streets. A 4-in. concrete base and an oil and screening wearing-surface will be used. Call for bids will be issued soon. C. D. Martin is city engineer.

Oakland, Cal.—Contract for construction of concrete sidewalks on 96th avenue has been awarded to J. Catucci, 1230 18th avenue, for $0.18 per square foot.

Phoenix, Ariz.—Contract for construction of bitulithic pavement on several streets has been awarded to California-Arizona Construction Co., 1700 East Washington street, Los Angeles.

Sacramento, Cal.—Contract for re-surfacing 45,000 sq. ft. of pavement for Southern Pacific Co. has been awarded to Highway Surfacing Company.

St. Helens, Ore.—County clerk will receive bids until 2 p.m., February 9, for improvement of Railroad avenue.

San Bernardino, Cal.—Bids will be received until 11 a.m., February 17, by L. R. Patty, county clerk, for improving about five miles of streets in several incorporated cities.

San Francisco, Cal.—Board of Public Works will receive bids until 2 p.m., February 7, for the following street work: concrete curbs and asphalt pavement on Natoma street, on Oakdale avenue, and on Ocean avenue; concrete curbs and basalt-block and asphalt pavement on Balboa street; concrete curbs and sidewalks and asphalt pavement on Bruce avenue, on Shafter avenue, and on Sunnyside avenue; concrete curbs and sidewalks and basalt-block and asphalt pavement on Gladys street.

Bids will be received until 11 a.m., February 25, at office of constructing quartermaster, for construction of 6000 ft. of boulevard and a reinforced concrete viaduct 180 ft. long across Lobos creek.

Contract for improvement of 46th avenue has been awarded to J. G. Harney, Pacific Bdg., for $5222.

Contract for improvement of Leland avenue has been awarded to M. A. Greely, 30th avenue and Anza street, for $12,009.45.

San Rafael, Cal.—Bids will be received until February 8 at office of Marin Municipal Water District, 825 Fourth street, for construction of four miles of new county road in place of old road, which will be submerged by Alpine reservoir. Work includes 14.12 acres clearing, 50,186 cu. yd. unclassified excavation, and 1823 ft. of 8 to 36-in. pipe.

Seattle, Wash.—Board of Public Works will receive bids until 10 a.m., February 9, for construction of concrete curbs, brick gutters, asphalt pavement, sewers, and water-mains on several streets.

Venice, Cal.—Bids will be received until 4 p.m., February 6, by C. Y. Burns, city clerk, for grading and construction of asphaltic concrete pavement on several streets.

Wallace, Ida.—Bids will be received until February 26 by city clerk for paving several streets. Alternate bids will be received on bitulithic on macadam base, concrete, hassam, asphaltic concrete, and wood blocks, the estimated cost ranging from $69,000 to $154,000.

SEWERS AND DRAINAGE

Sacramento, Cal.—Bids will be received until 11 a.m., February 6, by M. J. Desmond, city clerk, for construction of sewers on several streets.

San Bruno, Cal.—Bids will be received until 8 p.m., February 14, by H. A. Brawley, city clerk, for construction of 6-in. sewer on El Camino Real.

San Francisco, Cal.—Board of Public Works will receive bids until 2 p.m., February 7, for construction of sewers on Hollister avenue, Gilman avenue, and Jennings street.

BRIDGES AND CULVERTS

El Centro, Cal.—Contract for construction of wooden bridge across Alamo river near Calipatria has been awarded to William Ledbetter Co., Pacific Electric Bdg., Los Angeles, for $4890.

Portland, Ore.—County commissioners will receive bids until 10 a.m., February 14, for driving 112 piles at Hawthorne bridge.

Sacramento, Cal.—Following bids have been received by State Highway Commission for construction of reinforced concrete highway bridge over New river near Seeley: Mercereau Bridge & Construction Co., $13,131; W. M. Ledbetter, $14,350; Munoz & Munoz, $14,949; Mesmer & Rice, $16,000; Holland Construction Co., San Diego, $17,290; Boyd Bros., San Diego, $20,500; J. P. Hunter, $21,000; S. M. Kerns, $26,300; Fred Hoffman and James Beer, Long Beach, $28,000. Engineers' estimate was $16,576.43. Bidders are from Los Angeles unless otherwise noted.

San Francisco, Cal.—Contract for construction of wooden bridge on Evans avenue has been awarded to Duncanson-Harrelson Co., Chronicle Bdg., for $1974.

Seattle, Wash.—Board of Public Works will receive bids until March 2 for construction of substructure for Eastlake bridge over Lake Washington canal. Estimated cost is $200,000. Contract for this work was awarded several months ago to Beers Building Co., but the contract was forfeited.

Vancouver, Wash.—County Commissioners will receive bids until February 7 for construction of steel bridge across east fork of Lewis river near La Center. Estimated cost is $10,000.

IRRIGATION AND WATER SUPPLY

Coalinga, Cal.—Bids will be received until February 19 by C. T. Walker, city clerk, for drilling wells for city water supply. F. G. Dessery, Central Bdg., Los Angeles, is consulting engineer.

Colusa, Cal.—Contract for construction of Arnold lateral for

Generated on 2024-09-30 01:23 GMT / https://hdl.handle.net/2027/uiug.30112007838433
Public Domain, Google-digitized / http://www.hathitrust.org/access_use#pd-google
Digitized by Google
Original from UNIVERSITY OF ILLINOIS AT URBANA-CHAMPAIGN

Cheney Slough Irrigation Co. has been awarded to C. A. Hische.

Eureka, Cal.—Bids will be received until 5 p.m., February 20, by J. P. Wunderlich, city clerk, for furnishing an 8 by 20-ft. steel horizontal pressure water-filter, with manifold system, fittings, and other appurtenances, to operate at a pressure of 100 lb. per square inch.

Grants Pass, Ore.—South Side irrigation district containing 8000 acres in this vicinity has been formed. George Dickinson is treasurer. Water will be obtained from Rogue river by means of gravity canals. Estimated cost is $240,000.

Hanford, Cal.—Bond issue of $44,000 for extensions of water-system has been voted.

Keystone, Wash.—Bond issue of $200,000 for construction of system for Keystone irrigation district has been voted.

Olinda, Cal.—Happy Valley irrigation district, which was suspended in 1895, will be re-organized. C. W. Bolles, S. C. Dick, and J. L. Dwinell are interested.

Richmond, Cal.—Residents of Richmond municipal water district have voted to dissolve the district.

San Diego, Cal.—Election has been called for March 6 to vote on formation of municipal water district.

San Francisco, Cal.—State Water Commission has granted permission to divert water to the following:

Mrs. B. Graham, Colusa, 31 second-feet from Sacramento river for irrigation. Plans include 20-in. centrifugal pump, 100-hp. motor, some 30-in. steel pipe, and two miles of main canal. Estimated cost of work is $5500.

Cheney Slough Irrigation Co., Colusa, 162 second-feet from Sacramento river for irrigation. Plans include one 36-in. and one 26-in. centrifugal pump, one 300-hp. and one 150-hp. motor, also canals. Estimated cost of work is $50,000.

C. A. Thayer, 16 Culloden Park, San Rafael, water from Haehl creek for irrigation. Plans include portable pumping-plant.

D. E. Kelliher, Eugene, 2½ second-feet from Littlejohn creek for irrigation. Plans include two pumping plants. Estimated cost of work is $6250.

C. J. Laird, Mt. Dome, two second-feet from Lower Klamath lake for irrigation. Plans include pumping-plant, ditch, and pipe-line. Estimated cost of work is $4000.

W. H. Garrison, Victorville, one second-foot from Crystal creek for irrigation. Plans include 1600 ft. of cement pipe. Estimated cost of work is $2000.

New England Corporation, Ripon, 2.7 second-feet from Stanislaus river for irrigation. Plans include pumping-plant.

Walker Mining Co., Salt Lake City, 20 second-feet from tributaries of Feather river for power. Plans include flume and pipe-line 7692 ft. long. Estimated cost of work is $25,000.

San Rafael, Cal.—Bids will be received until February 8 at office of Marin Municipal Water District, for clearing site of Alpine reservoir. Alternate bids will be received on two plans, one requiring 215 acres of clearing, and the other 135 acres.

Twin Falls, Ida.—Bids will be received until noon, February 6, by W. O. Taylor, secretary Twin Falls Canal Co. for construction of concrete lining on one mile of high-line canal near Hansen. There will be 54,000 sq. yd. of 4-in. lining, painted with asphalt.

Waterford, Cal.—Bids will be received until 10 a.m., February 10, by C. C. Horsley, secretary Waterford irrigation district, for construction of laterals No. 2 and 3B, comprising about 85,700 cu. yd. excavation and embankment. These laterals are 6 ft. wide on the bottom, with banks 3½ to 4½ ft. high and 4 ft. wide. The inner slope will be 2:1 and the outer 1½:1. These laterals are from 4 to 11 miles east of Waterford. Plans and specifications may be obtained from secretary upon deposit of $5.

LIGHT, HEAT, AND POWER

Martinez, Cal.—Pacific Gas & Electric Co. will construct new street-lighting system.

Seattle, Wash.—Chicago, Milwaukee & St. Paul Railroad will electrify line from Othello to Pacific coast, about 200 miles.

Sonora, Cal.—Election will be called to vote on bond issue of $20,000 for construction of municipal lighting system. Wires will be placed underground.

RIVER AND HARBOR WORK

Eureka, Cal.—Mercer-Fraser Co., First and G streets, was the only bidder at $9000 for construction of trestle and wharf for salving cruiser 'Milwaukee.'

San Francisco, Cal.—Bids will be received until 11 a.m., February 19, at office of C. & O. Lumber Co., 605 Fife Bdg., for construction of creosoted-pile wharf and approach at Brookings, Oregon. Wharf will be 64 by 400 ft. Approach will be 30 by 800 feet.

Tacoma, Wash.—Contract for dredging channel has been awarded to D. W. Rutherford, Municipal Dock, for $11,159.90.

Vallejo, Cal.—Board of consulting engineers, including city engineer T. D. Kilkenny, has reported in favor of work on city bulkheads costing $8000 to permit placing about 900,000 cu. yd. dredged material behind the bulkheads.

Washington, D. C.—Bureau of Yards and Docks, Navy Department, will receive bids until March 20 for dredging about 1,000,000 cu. yd. material from channel at Mare Island navy yard.

RAILROAD WORK

Provo, Utah.—Utah-Idaho Sugar Co. will construct eight-mile railroad. Estimated cost is $100,000.

San Diego, Cal.—Contract for construction of remaining 20 miles of line for San Diego & Arizona Railroad has been awarded to Utah Construction Co., Ogden and San Francisco.

San Francisco, Cal.—Board of Supervisors has appropriated $37,605 for purchase of steel rails for municipal railway.

BUILDING CONSTRUCTION

Bakersfield, Cal.—Odd Fellows will construct $60,000 building.

Bay Point, Cal.—Pacific Textile Co. will construct cotton and woolen-mill.

Crockett, Cal.—California-Hawaiian Sugar Refining Co., 230 California street, San Francisco, will enlarge refinery. Estimated cost is $2,500,000.

Dillon, Mont.—Bids will be received until February 26 by J. M. Warren, architect, Daly Bank Bdg., Butte, for construction of three-story hotel-building.

Fort Jones, Cal.—Michael Ignacio will construct $40,000 hotel.

Fresno, Cal.—Bids will be received until 3 p.m., February 7, by I. J. Knapp, Griffith-McKenzie Bdg., for construction of brick warehouse.

Lindsay, Cal.—Contract for construction of brick building for Central California Electric Co. has been awarded to Marlow & Sons.

Los Angeles, Cal.—All bids for construction of buildings on county hospital grounds have been rejected because the county has no funds available for the work.

Bids will be received until February 10, by construction department of Salt Lake Route, Pacific Electric Bdg., for construction of passenger and freight depot at Whittier.

Martinez, Cal.—Shell Oil Co. will spend $500,000 on improvements of plant during the coming year.

Richmond, Cal.—A. W. Cornelius, Merchants National Bank Bdg., San Francisco, has completed plans for theatre-building. Estimated cost is $127,000.

Sacramento, Cal.—Bids will be received until February 10 by Utah Condensed Milk Co., for construction of hollow-tile factory buildings and 25,000 gal. steel water-tank on steel tower. E. C. Hemmings, 1005 K street, is architect.

Bids will be received until noon, February 23, by W. F. McClure, state engineer, for construction of buildings for State Mining Bureau at Taft. Plans from state engineer upon deposit of $10.

Contract for construction of pile foundation for gas-holder for Pacific Gas & Electric Co. has been awarded to Jenkins & Wells, 3530 York avenue, for $3702.40.

Contract for construction of reinforced concrete foundation for structure for Pacific Gas & Electric Co. has been awarded to Teichert & Ambrose, Ochsner Bdg., for $2240.

San Bernardino, Cal.—Contract for construction of car-shop for Santa Fe railroad has been awarded to Simpson Construction Co., Los Angeles, for $62,000.

San Francisco, Cal.—E. J. Symmes, Pacific Bdg., is preparing plans for hotel and other buildings to be constructed for Desmond Park Service in Yosemite valley and at Mariposa Big Trees. Estimated cost is $240,000.

Contract for construction of shed on pier No. 29 has been awarded to Clinton Construction Co., 140 Townsend street, for $104,600.

Santa Barbara, Cal.—Bids will be received until noon, Febru-

Generated on 2024-09-30 01:24 GMT / https://hdl.handle.net/2027/uiug.30112007838433
Public Domain, Google-digitized / http://www.hathitrust.org/access_use#pd-google
Digitized by Google
Original from UNIVERSITY OF ILLINOIS AT URBANA-CHAMPAIGN

ary 9, by J. W. Turrentine, Arlington hotel, for construction of building for U. S. Department of Agriculture at Summerland.

Seattle, Wash.—Bids will be received until February 7 by R. W. Jones, Central Bdg., for construction of three-story addition to Seward school.

Board of Public Works will receive bids until March 16 for construction of addition to steam power-plant at Lake Union.

Stockton, Cal.—Stockton Sugar Co. will construct factory on Moss tract. Estimated cost is $117,000. Frank Lyons, 807 North El Dorado street, is interested.

Washington, D. C.—Bureau of Yards and Docks, Navy Department, will receive bids until February 26 for construction of lavatory and locker building at Puget Sound, Washington. Building will be frame on a concrete foundation.

MACHINERY AND SUPPLIES

Emmett, Ida.—Bids will be received until 6:30 p.m., February 21, by D. M. Stokesberry, city clerk, for construction of 1666 ft. of 15-in. and 6524 ft. of 24-in. vitrified pipe.

Ketchikan, Alaska.—Contract for furnishing 200 tons of coal to lighthouse inspector has been awarded to Pacific Coast Coal Co., Juneau, for $1480.

Los Angeles, Cal.—Board of Public Works will receive bids until 10 a.m., February 5, for furnishing 3200 tons crushed rock, 2700 tons of sand, and 1,164,000 sewer-brick for construction of outfall sewer at Hyperion.

Miles City, Mont.—Bids will be received until 5 p.m., February 26, by Paul Allmayer, city clerk, for furnishing materials for extension of underground steam-heating system.

North Yakima, Wash.—Bids will be received until 2 p.m., February 17, at office of U. S. Reclamation Service, for the purchase of a miscellaneous quantity of machinery and other equipment, including blowers, boilers, excavator-buckets, dump-cars, air-compressors, pile-driver-hammers, hoists, dinkey locomotives, trucks, plows, pumps, dipper dredge, Lidgerwood excavator, steam-shovel, caterpillar tractors, horses, and mules. Detailed list on file at office of Western Engineering.

Quincy, Cal.—Bids will be received until 10 a.m., March 5, by F. R. Young, county clerk, for furnishing six dozen 40-watt and six dozen 60-watt mazda lamps.

Sacramento, Cal.—Bids will be received until 11 a.m., February 6, by M. J. Desmond, city clerk, for furnishing liquid chlorine during the coming year.

Senoritó, New Mexico.—Contract for construction of mill, power-plant, two-mile tramway, mining machinery, and other equipment for Senorito Copper Corporation has been awarded to J. G. White Engineering Corporation.

Washington, D. C.—Bids will be received until February 19 by Bureau of Yards and Docks, Navy Department, for furnishing one 40-ton and four 10-ton bridge-cranes at Puget Sound, Washington.

Bids will be received until February 20 by Bureau of Supplies and Accounts, Navy Department, for furnishing a miscellaneous quantity of electric cable, conductors, and wire, at Mare Island, Cal. Schedule 628 from Purchasing Pay Officer, U. S. Navy Pay Office, San Francisco.

Bureau of Supplies and Accounts, Navy Department, will receive bids until February 27 for furnishing the following: for delivery at Mare Island, Cal., 7000 ft. plow-steel tiller-rope, 800 lb. copper wire, 150 lb. phosphor-bronze wire, miscellaneous quantity screw eyes, sandpaper, cotter-pins, combination pliers, and screw-drivers, schedule 660; for delivery at Puget Sound, Wash., 115 gross hacksaw blades, 6 hydraulic jacks, miscellaneous quantity hand-saws, screw-drivers, and claw-hammers, schedule 660. Particulars from Purchasing Pay Officer, U. S. Navy Pay Office, San Francisco.

Bids will be received until 10:30 a.m., February 11, by general purchasing officer, the Panama Canal, for furnishing pipe-fittings, pig-iron, hardware, fire-brick, lime, and creosote oil. Circular No. 1116.

Bids will also be received until 10:30 a.m., February 15, for furnishing gasoline. Circular No. 1118. Both these circulars may be obtained from assistant purchasing agent, Fort Mason, San Francisco.

Bureau of Yards and Docks, Navy Department, will receive bids until February 26, for furnishing a one-ton bucket-dredge at Mare Island, California.

Following bids were received by Department of Agriculture for furnishing equipment at Summerland, California:

Power-conveyor for handling kelp: Carrol Electric Co., Washington, $3225; Robins Conveying Belt Co., New York, $6227; Gifford-Wood Co., Hudson, N. Y., $6594; Jeffrey Manufacturing Co., Columbus, $5600 and $6200; Link Belt Engineering Co., Philadelphia, $3634.

Two power-operated cranes and grab-buckets: Link Belt Engineering Co., $10,598 and $13,394; Industrial Works, Bay City, Mich., $12,125 and $14,645.

Woodland, Cal.—Bids will be received until 5 p.m., February 5, by Neal Chalmers, city clerk, for furnishing the following: 10,200 ft. of class A 8-in. cast-iron pipe, 2400 ft. of 8-in. vitrified sewer-pipe, 6100 ft. of 6-in. vitrified sewer-pipe, 72 four by eight-inch wye-branches, and 170 four by six-inch wye-branches.

MISCELLANEOUS

Eureka, Cal.—Following bids have been received for salving removable parts from cruiser 'Milwaukee'; C. F. Kilgaard, $65 per ton for dismantling and removal, and $27.50 for removal alone; Mercer-Fraser Co., $70 and $24; H. M. Pitman, $25.70 and $17.30; C. A. Blume, $23 and $15; T. P. H. Whitelaw, $60 and $30.

Los Angeles, Cal.—City Engineer Homer Hamlin has completed plans for Second Street tunnel and bids for construction will be received until February 26 by Board of Public Works.

Placerville, Cal.—Plans are being prepared and call will be issued soon for construction of siren fire-alarm system. George Wickes is fire chief.

Rochester, Nev.—Rochester Combined Mines Co. has been incorporated to develop mines in district. Plans include construction of 600-ton stamp-mill.

Sacramento, Cal.—County surveyor Drury Butler has reported in favor of construction of tunnel under Sacramento river between Sacramento and Freeport.

San Francisco, Cal.—Contract for drilling well at city hall has been awarded to J. B. Rogers, 110 Sutter street, for $1200.

Washington, D. C.—Helm investigating board has made preliminary report to Navy Department, recommending the retention of the Mare Island navy yard and the establishment of a second base at one of eight sites on San Francisco bay.

BUILDING PERMITS

(Continued from page 81)

JANUARY 27

Two Story Frame Dwelling—Cost $3000. S. A. Born Building Co., owner. Lincoln Manor Lot No 15.

Two Story Frame Residence—Cost $8330. Mrs. Annie Casey, owner. NE Sanchez and 16th.

JANUARY 29

Two Story Frame Dwelling—Cost $4000. Urban Realty Improvement Co., owner. E Borica N Urbano drive.

Tenement Alterations—Cost $9000. Chandler Burgess, owner. NW Laguna and Vallejo.

Three Story Frame Tenements—Cost $25,000. R. O'Connor, owner. NE Broderick and Pine.

One Story Concrete Stores—Cost $10,723. Dr. C. F. Buckley, owner. NW Larkin and Olive.

JANUARY 30

One Story Frame Flats—Cost $5000. A. Cuneo, owner. SE San Bruno and Sycamore.

Two Story Frame Dwelling—Cost $3000. A. T. Morris, owner. W 10th Ave 200 S Balboa.

One Story Concrete Store and Manufacturing Building—Cost $4000. Bothin Real Estate Co., owner. SW 8th and Howard.

JANUARY 31

One and One-Half Story Frame Dwelling—Cost $2800. A. and I. Peters, owners. SE Naples 125 NE Brazil.

FEBRUARY 1

Two Story Frame Dwelling—Cost $9785. F. H. Evans, owner. E 17th Ave 125 N Lake.

Four Story Brick Apartments and Stores—Cost $93,450. Gerard Investment Co., owner. SW Geary and Leavenworth.

Two Story Frame Dwelling—Cost $8890. S. A. Clarke, owner. Lots 10 and 11 Blk 15 Forest Hill.

Two Story Frame Flats—Cost $3900. C. A. Hall, owner. E Third Ave 85 N Irving.

REQUEST FOR HAULING BIDS

Bids are requested for a yearly gravel-hauling contract by C. E. & C. W. Wood, Los Banos, Cal. Hauling is to be done by motor-truck from gravel plant on Los Banos Creek, to points in Los Banos and vicinity, on a yearly contract basis.

For full particulars address C. E. & C. W. Wood, D248, Los Banos, California.

Generated on 2024-09-30 01:32 GMT / https://hdl.handle.net/2027/uiug.30112007838433
Public Domain, Google-digitized / http://www.hathitrust.org/access_use#pd-google
Digitized by Google
Original from UNIVERSITY OF ILLINOIS AT URBANA-CHAMPAIGN